Design Report & Stability Certificate

Site Address

PLAN SHOWING THE PROPOSED CONSTRUCTION OF STILT FLOOR + 4 FLOORS + 5TH FLOOR(PT) (HEIGHT – 18.30 M) RESIDENTIAL BUILDING WITH 37 DWELLING UNITS (AVAILING AFFORDABLE HOUSING BENEFIT) AT VIGNARAJAPURAM 2ND MAIN ROAD , VENGAIVASAL, CHENNAI 600126,COMPRISED IN OLD S.NO.41/4B4 & 41/4B5 , AS PER PATTA NEW S.NO.41/4B4A2 & 41/4B5A2 OF VENGAIVASAL VILLAGE WITHIN THE LIMITS OF ST.THOMAS MOUNT, PANCHAYAT UNION.

S.Subramaniam,MS.(Struc).PDQS.DRTM.
Registered Structural Engineer Grade – 1
CMDA : (SE/GR-I/2024/02/008)
DTCP : (CGLDIST/SE/Grade-1/2019/05/005)

Kannimar Consultants

Industrial Building Consultants
Structural Design

New No.14, Kannimar Villa, Ganga Nagar, Jafferkhanpet, Ashok Nagar, Chennai – 83.
Ph: 24749439, 95000 74947.
kannimarconsultants@gmail.com

S. Subramaniam, M.S.(Struc)., PDQS, DRTM.
Registered Structural Engineer Grade-I.
(SE / GR-I / 2024 / 02 / 008).
New No: 14, Old No. 17A, Kan
Ganga Nagar, Jafferkhanpet, Ashok Nagar,
Chennai - 83, Ph : 24749439, 9500074947
kannimarconsultants@gmail.com

KC-6550

Kannimar Consultants
Industrial Building Consultants
Structural Design
New No. 14, Old No. 17A, Kannimar Villa, Ganga Nagar, Jafferkhanpet,
Ashok Nagar, Chennai - 83. Ph. : 24749439, 94441 83538, 9500074947

S. Subramaniam, M.S. (Struc). PDQS. DRTM.
Chartered Engineer
Registered Structural Engineer Grade - I
E-mail : kannimarconsultants@gmail.com

Stability Certificate

1. The detailed engineering and structure design of The Proposed Construction Of Stilt Floor + 4 Floors + 5th Floor(Pt) (Height – 18.30 M) Residential Building With 37 Dwelling Units (Availing Affordable Housing Benefit) At Vignarajapuram 2nd Main Road , Vengaivasal, Chennai 600126,Comprised In Old S.No.41/4B4 & 41/4B5 , As Per Patta New S.No.41/4B4A2 & 41/4B5A2 Of Vengaivasal Village Within The Limits Of St. Thomas Mount, Panchayat Union. based on the report of Geotechnical investigation (Soil test) done by GLOBE GEOTECHNIQUES report no: GGTQ_FEB25_111_VENGAIVASAL dated on 25.02.2025 and considering the functional requirement of the building.

2. It is certified that among other factors, the proposed building has been designed to resist earthquake. I/We checked various parameters and found that the proposed building would be safe.

3. I/We further certify that:

   i) The minimum grade of concrete is **M25**

   ii) The design and analysis has been done using the code of practice for plain and reinforced concrete as per IS 456, design loads as per IS codes No **IS:875-part-2 (1987)** and design of earthquake resistant structure as per IS code No. **IS:1893:2016 part - I.**

4. The building will be safe and sound when used for the purpose for which it is designed.

S. Subramaniam, M.S.(Struc)., PDQS, DRTM.
Registered Structural Engineer Grade-I.
(SE / GR-I / 2024 / 02 / 008).
New No: 14, Old No. 17A, Kannimar Villa,
Ganga Nagar, Jafferkhanpet, Ashok Nagar,
Chennai - 83, Ph : 24749439, 9500074947
kannimarconsultants@gmail.com

Kannimar Consultants
Chennai
24749439

Load calculation

Building Name: Residential flats
Number of Floor: Stilt + 5

Concrete Unit wt	25	kN/m^3
Brick work	20	kN/m^3
Live load -rooms	2	kN/m^2
Live load -stair&cordr	3	kN/m^2
Floor finish	1	kN/m^2
Floor Height		

Stilt floor	=	3 m	Parking
First floor	=	3.05 m	Residence
Second floor	=	3.05 m	Residence
Third floor	=	3.05 m	Residence
Fourth floor	=	3.05 m	Residence
Fifth Floor	=	3.05 m	Residence
Head room	=	2.8 m	

Load on Column **column** L4 X= 4.83 Y = 5.525

Sl. No	Description	No	L	B	D	Qty	UnitLoad	Total Load
	Ground floor							
1	Column Load	1	0.3	0.675	5.5	1.11	25	27.84
2	Plinth beam	1	10.355	0.23	0.45	1.07	25	26.79
3	Roof beam	1	4.83	0.23	0.46	0.51	25	12.78
		1	5.525	0.23	0.46	0.58	25	14.61
4	Roof slab	1	4.83	5.525	0.14	3.74	25	93.40
5	Live load-all area	1	4.83	5.525	1	26.69	2	53.37
6	Floor finish	1	4.83	5.525	1	26.69	1.5	40.03
7	BW: up to FFL	1	10.355	0.23	0.75	1.79	20	35.72
8	BW: Above FFL							
	230 thick	1	0	0.25	0	0.000	20	0.00
	115 thick	1	0	0.15	0	0.000	20	0.00
								304.55
	First floor							
1	Column Load	1	0.3	0.675	3.05	0.618	25	15.44
2	Roof slab	1	4.83	5.525	0.14	3.736	25	93.40
3	Roof beam	1	4.83	0.23	0.46	0.511	25	12.78
		1	5.525	0.23	0.46	0.585	25	14.61
4	Live load-all area	1	4.83	5.525	1	26.686	2	53.37
5	Floor finish	1	4.83	5.525	1	26.686	1.5	40.03
6	Brick wall-230 thick	1	0	0.25	2.6	0.000	20	0.00
7	Brick wall -115 thick	1	10.355	0.15	2.6	4.038	20	80.77
	Additional load	1	0	2.5	0.2	0.000	25	0.00
			First floor					310.40
	Parapet load							
1	Brick wall	1	0	0.25	1	0	20	0
2	Weathering coarse material	1	4.83	5.525	0.1	2.67	20	53.37
			Parapet load					53.37

COLUMN TOTAL LOAD **column** L4

Sl.No	Description	Load	
1	Stilt floor	304.55	
2	First floor	310.40	
3	Second floor	310.40	
4	Third floor	310.40	
5	Fourth floor	310.40	
6	Fifth Floor	310.40	
7	Terrace	53.37	
8	Total	1909.92	
	Say	200.00	MT

S. Subramaniam, M.S.(Struc)., PDQS, DRTM.
Registered Structural Engineer Grade-I.
(SE / GR-I / 2024 / 02 / 008).
New No: 14, Old No. 17A, Kan
Ganga Nagar, Jafferkhanpet, Ashok Nagar,
Chennai - 83, Ph : 24749439, 9500074947
kannimarconsultants@gmail.com

Kannimar Consultants,
Chennai
24749439

COLUMN DESIGN

Column load as per load calculation		=	200	Mt			
Long Column design as per IS456-2000, Page 71							
Factored Load	P_u	=	$C_r(0.4\, f_{ck}.\, A_c + 0.67\, f_y.\, A_{sc})$				
Working load	P	=	$P_u/1.5$				
	C_r	=	$1.25 - [(l_e/D)/48]$				
PROCEDURE:							
	F_{ck}	=	25	N/mm^2			
	F_y	=	415	N/mm^2			
Length of column	L	=	3.75	m			
	l_e	=	3.19	m	0.85* L		
	C_r	=	0.96				
Modulus of elasticity of concrete	E_c	=	25000.00	N/mm^2			
Ref IS 456-2000 Cl 6.2.3.1							
Flexural strength of concrete	f_{cr}	=	3.50	N/mm^2			
Ref IS 456-2000 Cl 6.2.2							
Maximum shear stress in concrete for limit state method of design							
Ref IS 456-2000 Table 20 Cl 40.2.3	$t_{c\,max}$	=	3.1	N/mm^2			
Permissible bearing stress		=	0.45*Fck				
		=	0.45	x	25		
Permissible bearing stress		=	11.25	N/mm^2			
Column size		=	300	675	mm		
Minimum Eccentricity,e		=	L/500 + Lateral dimension/30				
One direction		=	17.50	mm			
Another Direction		=	30.00	mm			
Minimum eccentricity		=	20	mm			
Consider Minimum Eccentricity		=	30.00	mm			
	0.05*b	=	15.00		<	30.00	
Area of column		=	202500	mm^2			
Number of rod		=					
		=	6	25	2944.88	mm^2	
		=	6	25	2944.88	mm^2	
Area of Steel(A_{sc})		=	5889.75	mm^2			
Area of Concrete(A_c)		=	196610.25	mm^2			
	P_u	=	3464200.2	N			
	P	=	2309466.8	N			
	Say	=	**230.95**	**Tonne**			
% of Reinforcement	**0.8**	<	**2.91**	<	**4**	%	
		SAFE		SAFE			
Column Load	230.95	>	200.00	**Mt**			
		SAFE					

Lateral Ties:

As per IS 456-2000; Clause 26.5.3.2.c-Page 49

Diameter shall not be less than		=	25 / 4				
		=	6.25	mm dia			
Provide		=	10	mm dia			
Spacing							
Shall not be more than following							
Least dimension of column		=	300	mm			
16x Smallest dia of column rod		=	400	mm			
Not more than		=	300	mm			
Minimum of above		=	300	mm			
Provide	10	@	150	mm C/c			
Development length in compression							
	Ld	=	$\phi * \sigma s / 4 * \tau_{bd}$				
	Ø	=	Dia of bar	=	25.00	mm	
(Fy/1.15)	σs	=	Stress in bar	=	360.87	N/mm^2	(0.87*Fy)
Page 43,26.2.1.1	τ_{bd}	=	Bond stress	=	2.8	N/mm^2	
	Ld	=	25 / 4	360.8696 / 2.8			
	Ld	=	**805.512**	mm			

SUMMARY

Column size		=	300	x	675		
Rebar		=	6	25			
			6	25			
Lateral tie	10	@	150	mm C/c			

Bond stress for **Compression** 43,IS 456-2000

Grade of concrete	Type	M20	M25	M30	M35	M40 & above
Design Bond Stress,N/mm²	Plain	1.5	1.75	1.875	2.125	2.375
	Deformed	2.4	2.8	3	3.4	3.8

S. Subramaniam, M.S.(Struc)., PDQS, DRTM.
Registered Structural Engineer Grade-I.
(SE / GR-I / 2024 / 02 / 008).
New No: 14, Old No. 17A, Kan
Ganga Nagar, Jafferkhanpet, Ashok Nagar,
Chennai - 83, Ph : 24749439, 9500074947
kannimarconsultants@gmail.com

Isolated Footing- Regular

Load on Column(P)	=	200	Mt		
	=	2000	kN		
Ultimate column Load P_u = (1.5 xP)	=	3000	kN		
Self Weight of footing(0.1P)	=	217.9	kN		
Total Load on column		2217.9	kN		
SBC of soil	=	250	kN/m^2		
f_{ck}	=	25	N/mm^2		
f_y	=	415	N/mm^2		
T_c max	=	3.1	N/mm^2	IS456-2000,P73	
$X_{u\ max}/d$	=	0.48		IS456-2000,P70	a
Assume footing concrete depth	=	825	mm	0.825	

Column Size

a	b	
0.3	0.675	m
300	675	mm

Column rod size	=	25	mm	
Foundation depth	=	2.5m		
Area of footing, A	=	2200.00 / 250.00		
	=	8.80	m^2	
Size of footing		2.97	m	

Adopt footing size

L(m)	B(m)
3.25	3.25

Footing area provided		10.56	m^2		
Net upward pressure(P/A)	p	189.35	<	250 kN/m^2	
			Safe		
Ultimate Design Pressure	(1.5 xp)	284.02	kN/m^2		

Depth Required for B M Consideration

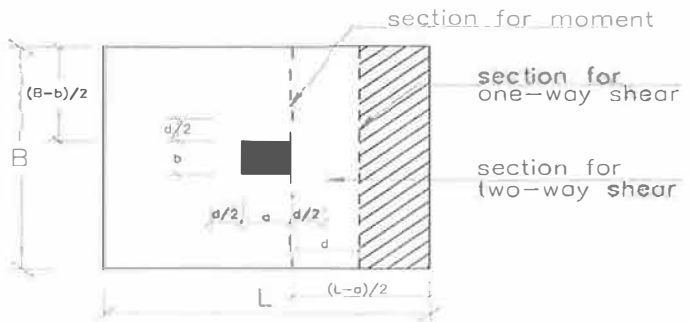

Max. BM along column edge	=	$\frac{P \times B \times (L-a)^2}{8}$				
p	=	189.35				
B	=	3.25				
L-a	=	3.25	-	0.3	=	2.95
$(L-a)^2$	=	8.7025				
BM	=	189.35 / 8	3.25	8.7025		
	=	669.42				
Max. BM	=	669.42 kN.m				0.385
M_u Limit	=	$0.138\ f_{ck}\ bd^2$				
		0.138	25	1000	564001	
	=	1945803450.00 Nmm				
		1945.80	>	669.42		
		M_u limit	>	Mu		
			Safe			
M_u(1.5 xBM)	=	1004.13 kN.m				

S. Subramaniam, M.S.(Struc)., PDQS, DRTM.
Registered Structural Engineer Grade-I.
(SE / GR-I / 2024 / 02 / 008).
New No: 14, Old No. 17A, Kan
Ganga Nagar, Jafferkhanpet, Ashok Nagar,
Chennai - 83, Ph : 24749439, 9500074947
kannmarconsultants@gmail.com

$$d^2 = \frac{Mu}{0.36f_{ck}\,(X_u/d)(1-.416X_u/d)1000}$$

d^2	=	1004134615.38 / 3457.38		d'	=	50 cover
					=	16 footing mc
d	=	**538.92** mm			=	8
D	=	825 mm		0.825	**Safe**	74
d	=	751 mm		m	0.751 m	

Check For Gross Bearing Capacity

Service Load	=	2000 kN	Single shear	**Safe**
Weight Of footing	=	217.85 kN		
Weight Of soil	=	29.6 kN		
Total	=	2247.4 kN		
Check For Gross Bearing Capacity		2247.43 / 10.56	**212.77**	

Area of Tension steelfor BM

	BM	=	0.87 x Fy xAt (d - Fy x At / Fck x b)		
	1004134615	=	271148.55 A_t	-	1.844 A_t^2
	a	=	1.844		
	b	=	271148.55		
	c	=	1004134615		
	2a	=	3.69		
	b^2	=	73521536167		
	4ac	=	7407028342		
	sqrt of b^2-4ac	=	257127.42		
	A_t	=	3801.55 mm^2		
	Per Rm	=	1169.71 mm^2		

Alternative method

	M_u/bd^2	=	0.548		
	Pt	=	**0.156** %		
		=	3803.51 mm^2		
Minimum Rebar	0.12%	=	901.2 mm^2		
	Adopt	=	1169.71 mm^2		
		16	mm	140	mm c/c
	1435.98	>	1169.71 mm^2		Per Rm
The design is		Safe			
	P_t	=	**0.19** %		

Depth Required for Punching shear

Single Shear :Critical section is taken at distance "d" from the face of the column

Shear Force	V	=	Shear area	x	Pressure
Shear area	L	=	3.25	m	
	b	=	0.72	m	
	area	=	2.35		
	V	=	189.35	x	2.35
	V	=	445.54 kN		
	V_u	=	668.31 kN		
	T_v	=	V_u / bd		
		=	668307.69 / 3250	751	
Nominal Shear Stress	T_v	=	0.274 N/mm^2		
Percentage of steel provided	P_t	=	0.19	%	
Shear strength of concrete	T_c	=			
Percentage of steel	P_t	=	0.19	%	

Permissible shear stress in concrete (kt_c) for solid slabs in limit state design method

Ref IS 456:2000 Cl 40.2.1.1, Table 19

f_{ck} N/mm²	p_t %	D of slab	k	$k\,t_c$ N/mm²
25	0.19	825	1.00	0.32

S. Subramaniam, M.S.(Struc)., PDQS, DRTM.
Registered Structural Engineer Grade-I.
(SE / GR-I / 2024 / 02 / 008).
New No: 14, Old No. 17A, Kan
Ganga Nagar, Jafferkhanpet, Ashok Nagar,
Chennai - 83, Ph : 24749439, 9500074947
kanmarconsultants@gmail.com

	0.274	<	0.32	N/mm^2
	T_v	<	kT_c	
	The design is	Safe		

Double Shear :Critical section is taken at distance "0.5d" from the face of the column

Footing area		=	10.56	m^2	
Critical section area		=	1.051	x	1.426
		=	1.50	m^2	
Net area		=	9.06	m^2	
Shear Force		=	Shear area	x	Pressure
			9.06	x	189.35
	V		1716.22	kN	
SF	V_u	=	2574.33	kN	
	T_v	=	V_u / bd		
	b	=	4954	mm	
	d	=	751		
		=	2574326.343		
		=	4954	x	751
Nominal Shear Stress		=	0.69	N/mm^2	
	T'_c	=	$K_s.T_c$		
	K_s	=	0.5+Bc		
	Bc	=	0.44	(a/b)	
	K_s	=	0.94		
Ks Not more than		=	1		
	K_s	=	0.944444444		
	Tc	=	1.250	(0.25*sqrtFck)	
	T'_c	=	1.181		
	Tv	<	T'_c		
	0.69	<	1.181	N/mm^2	
		Safe			

Transfer of force at the base of the column

	P_u	=	3000	kN	
Compressive bearing resistance		=	0.45fck * area of column		
		=	2278.13	<	3000 kN
			Consider Longitudinal rebar for bond		

Development length in Compression

	Ld	=	$\frac{Ø * \sigma s}{4 * T_{bd}}$		
	Ø	=	Dia of bar	=	25 mm
(0.87*Fy)	σs	=	Stress in bar(Fy/1.15)	=	361.05 N/mm^2
Page 43,26.2.1.1	T_{bd}	=	Bond stress	=	2.4 N/mm^2
	L_d	=	25 / 4	361.05 / 2.4	
Required Development Lenth	L_d	=	940.2	mm	
Available Development Lenth		=	1201.0	>	940.2 mm
				Safe	

SUMMARY

Footing Size	=	**3.25**	x	**3.25**	M	
Footing concrete depth	=			**825**	mm	
Footing rod	=	**16**	@	**140**	mm c/c	

Bond stress for **Compression** P 43,IS 456-2000

Grade of concrete	Type	M20	M25	M30	M35	M40 & above
Design Bond Stress,N/mm^2	Plain	1.5	1.75	1.875	2.125	2.375
	Deformed	2.4	2.8	3	3.4	3.8

S. Subramaniam, M.S.(Struc)., PDQS, DRTM.
Registered Structural Engineer Grade-I.
(SE / GR-I / 2024 / 02 / 008).
New No: 14, Old No. 17A, Kan
Ganga Nagar, Jafferkhanpet, Ashok Nagar,
Chennai - 83, Ph : 24749439, 9500074947
kanmarconsultants@gmail.com

Kannimar Consultants,
Chennai
24749439

PLINTH BEAM

Span	=	5.52	m
Wall thickness-Below basement	=	0.23	m
Wall height	=	0.75	m
Wall thick-above basement	=	0.25	m
Wall height	=	0	m
Beam Size b	=	230	mm
D	=	375	mm
d'	=	46	mm
d	=	329	mm
F_y	=	415	N/mm²
F_{ck}	=	25	N/mm²

l/16 = **345** mm
d'/d = 0.140

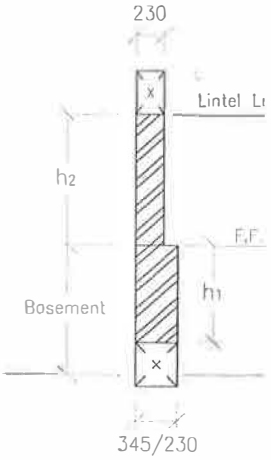

LOAD CALCULATIONS:

Self wt = b x D x 1 x 25	=	2.16	kN/m
Brick masonry weight below basement	=	3.45	kN/m
Brick masonry weight above basement	=	0	
Max Udl	w =	5.61	kN/m

Max B.M at Mid span = (wl²/20)

5.61	5.52	5.52
	20	

BM **8.54** kN.M

SF = wl/3 (0.5 x w x l)

5.61	x	5.52
	3	

SF **10.32** kN

M_u/bd^2 =

1.5	8.54	1000000
230.00	329	329

= **0.51** N/mm²

Refer SP 16 ,Page 86,Pt = **0.146** % P_t = 0.1

A_{st} =

0.146	230	329
	100	

Ast = 111 mm² = 76 mm²

Provide

2	16
1	12
0	16

2	16
1	12
0	12

"A_{st}" Provided 515.16 > 110.59 515.1568 > 75.67

SAFE **SAFE**

Min.Reinf = (0.87 x b x d / F_y) mm²

0.870	230	329
	415	

Min.Reinf = 158.633 mm²

"A_{st}" Provided 515.2 > 158.6 mm²

SAFE

CHECK FOR SHEAR STRENGTH

T_c Max = 0.62 *sqrt(F_{ck})

0.62	5

= 3.10 N/mm²

As per clause 40.2 (P73)
of IS 456-2000

Percentage of steel P_t = 0.68 %

Shear strength = kT_c

k = 1

% of steel	T_c
0.5	0.49
0.75	0.57

For 0.68 0.55

kT_c = 1.00 X 0.55

Now kT_c = 0.55 N/mm² < 3.10 N/mm²

SAFE

Nominal Shear stress T_v = V_u/b.d

V_u = 1.5 X 10.32

15.473 kN

T_v = V_u/b.d

15.47	1000
230.00	329

T_v = 0.20 < 3.10 N/mm²

SAFE

0.20 < 0.55 N/mm²

T_v < kT_c

SAFE

Total shear strength V_u = 15473.25 N

Shear contribution by concrete T_c.b.d =

0.55	230	329

41456.1176

Shear contribution by stps V_{us} = V - T_c b.d

15473.25 - 41456.12

25982.87 N

Provide Y 8 460 mm C/C

S. Subramaniam, M.S.(Struc)., PDQS, DRTM.
Registered Structural Engineer Grade-I.
(SE / GR-I / 2024 / 02 / 008).
New No: 14, Old No. 17A, Kan
Ganga Nagar, Jafferkhanpet, Ashok Nagar,
Chennai - 83, Ph : 24749439, 9500074947
kannimarconsultants@gmail.com

Kannimar Consultants,
Chennai
24749439

Area or 2 legged stps a = 101 mm^2

Spacing of stirrups = $\frac{0.87 * Fy * a * d}{V_{us}}$

0.87	415	101	329
	-25982.87		

= **460** mm **C/C**

Provide shear Rebar without considering conc. shear Y 8 **772** mm C/C

Area or 2 legged stps a = 101 mm^2

= $\frac{0.87 * Fy * a * d}{V_u}$

0.87	415	101	329
	15473.25		

= **772** mm **C/C**

V_{us}/d =

-25982.87	10
329.00	1000

= 0.790 kN/cm

Minimum Stirrups Reinforcement Y 8

A_{sv} = 100.52 mm^2

S_v = 0.87*Fy*Asv/0.4*b

0.87	415	101
0.4	230.00	

= 36297.16832 / 92

= **394** mm C/C

Maximum Spacing of Stirrups = 0.75*d

= 246.75 mm

= 300 mm

Least of above 246.75 mm

Y 8 @

Provide 394 > 200 < 246.75

SAFE SAFE

531 > 200 < 772

SAFE SAFE

Development length in Tension

Ld =

Ø = 16 mm

(0.87*Fy) σ_s = stress in bar(Fy = 415) = 360.87 N/mm^2

Page 43.26.2.1.1 τ_{bd} = bond stress = 2.24 N/mm^2

Ld =

16	360.8695652
4	2.24

Ld = 644.4 mm

Bond stress for tension 2.43,IS 456-2000

Grade of concrete	Type	M20	M25	M30	M35	M40 & above
Design Bond Stress N/mm²	Plain	1.2	1.4	1.5	1.7	1.9
	Deformed	1.92	2.24	2.4	2.72	3.04

S. Subramaniam, M.S.(Struc)., PDQS, DRTM.
Registered Structural Engineer Grade-I.
(SE / GR-I / 2024 / 02 / 008).
New No: 14, Old No. 17A, Kan
Ganga Nagar, Jafferkhanpet, Ashok Nagar,
Chennai - 83, Ph : 24749439, 9500074947
kannimarconsultants@gmail.com

Centre Beam-Continues

Span	=	5.527 m			
Lateral span	=	4.83 m			
Wall height	=	2.6 m			
Wall thickness	=	0.15 m			
b	=	230 mm			
D	=	600 mm	l/12.5	**442**	mm
d'	=	50 mm	d'/d =	0.091	
d	=	550 mm			
f_y	=	415 N/mm^2			
f_{ck}	=	25 N/mm^2			

Slab Load:

Self wt	=	3.5 kN/m^2	slab thk	0.14 m
Live Load	=	2 kN/m^2		
Floor Finish	=	1.5 kN/m^2		
Mish. Load	=	1 kN/m^2		
		8 kN/m^2		

Load Calculations:

Brick work/ AAC Block	=	20 kN/m^3
Self wt = b x D x 1 x 25	=	3.45 kN/m
Brick work:	=	6.63 kN/m
Udl for slab	=	21.76 kN/m
Max Udl	w =	31.84 kN/m
M_u Limit	=	$0.138\ f_{ck}\ bd^2$

0.138	25	230	302500

= 240033750.00 Nmm

240.03 > 132.62

M_u limit > M_u

Singly Reinforced

"d" - reqd = 468.82 < 550 mm

Safe

Max B.M at Mid span = $(wl^2/13)$

31.84	5.527	5.527
	13	

BM = 74.81 kN.M

M_u Midspan = **112.22 kN.M**

Max B.M at Support = $(wl^2/11)$

31.84	5.527	5.527
	11	

BM = 88.41 kN.M

M_u Support = **132.62 kN.M**

SF = wl/2 (0.5 x w x l)

31.84	x	5.527
	2	

SF **87.98** kN

M_u/bd^2 @Mid span =

1.5	74.81	1000000
230.00	550	550

= 1.61 N/mm^2

M_u/bd^2 @Support =

1.5	88.41	1000000
230.00	550	550

= 1.91 N/mm^2

Rebar @ Mid span

	P_t	P_c
Refer SP 16 ,Page 86,Pt =	0.486	0.24

0.486 %

A_s =

0.486	230	550
	100	

S. Subramaniam, M.S.(Struc)., PDQS, DRTM.
Registered Structural Engineer Grade-I.
(SE / GR-I / 2024 / 02 / 008).
New No: 14, Old No. 17A, Kan
Ganga Nagar, Jafferkhanpet, Ashok Nagar,
Chennai - 83, Ph : 24749439, 9500074947
kanmarconsultants@gmail.com

	Ast	=	615	mm^2		=	308	mm^2
Provide		2	20			2	20	
		2	16			0	20	
		0				0	16	
"A_{st}" Provided		1030.31	>	615.01	mm^2	628.24	>	307.51
		0.81	Safe			0.50	Safe	

Rebar @ Support

		P_t	P_c		
Refer SP 16 ,Page 86,Pt	=	0.585	0.293		0.585 %

	A_{st}	=	0.585	230	550			
				100				
	Ast	=	740	mm^2		=	370	mm^2
Provide		2	20			2	20	
		2	16			2	20	
		0	16			0	16	
"A_{st}" Provided		1030.31	>	740.04	mm^2	1256.48	>	370.02
		0.81	Safe			0.99	Safe	

Min.Reinf = 0.87 x b x d / F_{yd} mm^2

	=	0.870	230	550
			415	

Min.Reinf = 265.193 mm^2

"A_{st}" Provided 1030.3136 > 265.193 mm^2

Safe

Min. % of steel required

As per Cl.26.5.1.1 IS456:2000 = 0.205 %

As per Cl.6.2.1 IS13920:1993 = 0.290 % (0.24 x fck) /fy)

$P_{t\,min}$ = **0.290 %** < 0.81 %

Safe

Max. % of steel to be used =

As per Cl.26.5.1.1 IS456:2000 = 4.000 %

As per Cl.6.2.1 IS13920:1993 = 2.500 %

$P_{t\,max}$ = **2.500 %** > 0.81 %

Safe

CHECK FOR SHEAR STRENGTH

As per clause 40.2 (P73) of IS 456-2000 — Tc Max = 0.62 *sqrt(Fck)

0.62	5

= 3.10 N/mm^2

Percentage of steel P_t = **0.81** %

Permissible shear stress in concrete (kt_c) for solid slabs in limit state design method

Ref IS 456:2000 Cl 40.2.1.1, Table 19

f_{ck} N/mm^2	P_t %	D of slab	k	$k\,t_c$ N/mm^2
25	0.81	400	1.00	0.59

Now kt_c = 0.59 N/mm^2 < 3.10 N/mm^2

Nominal Shear stress T_v = $V_u/b.d$ — Safe

V_u = 1.5 X 87.98

131,970

T_v = $V_u/b.d$

131,97	1000
230.00	550

= 1.04 < 3.10 N/mm^2

Safe

1.04 T_v = 0.59 N/mm^2 kt_c

Provide Shear Bar

S. Subramaniam, M.S.(Struc)., PDQS, DRTM.
Registered Structural Engineer Grade-I.
(SE / GR-I / 2024 / 02 / 008).
New No: 14, Old No. 17A, Kan
Ganga Nagar, Jafferkhanpet, Ashok Nagar,
Chennai - 83, Ph : 24749439, 9500074947
kanumarconsultants@gmail.com

Total shear strength	V_u	=	131969.88 N			
Shear contribution by concrete	$T_c b.d$	=	0.59	230	550	
			74635			
Shear contribution by stps	V_{us}	=	V_u	-	T_c b.d	
			131969.88	-	74635	
			57334.88 N			
Minimum shear resistance	0.4bd	=	50600.00 N			
		=	57334.88 N			
Provide	Y 10		544 mm C/C			
Area or 2 legged stps	a	=	157 mm^2			
Spacing of stirrups		=	$\frac{0.87 * Fy * a * d}{V_{us}}$			
		=	0.87	415	157	550
				57334.88		
		=	**544** mm C/C			
Provide shear Rebar without considering conc. shear	Y 10		**236** mm C/C			
	a	=	157 mm^2			
		=	$\frac{0.87 * Fy * a * d}{V_u}$			
		=	0.87	415	157	550
				131969.88		
		=	**236** mm C/C			
Minimum Stirrups Reinforcement	Y 10					
	A_{sv}	=	157.06 mm^2			
	S_v	=	0.87*Fy*Asv/0.4*b			
			0.87	415	157	
			0.4	230.00		
			$\frac{56706.513}{92}$			
		=	**616**	**mm**	**C/C**	
Maximum Spacing of Stirrups		=	0.75 *d			
		=	412.5	mm		
		=	300	mm		
Least of above			300	mm		
				Y	10	
				@		
Provide		616	>	175	<	300
			Safe		**Safe**	

o

S. Subramaniam, M.S.(Struc)., PDQS, DRTM.
Registered Structural Engineer Grade-I.
(SE / GR-I / 2024 / 02 / 008).
New No: 14, Old No. 17A, Kan
Ganga Nagar, Jafferkhanpet, Ashok Nagar,
Chennai - 83, Ph : 24749439, 9500074947
kanumarconsultants@gmail.com

SLAB DESIGN AS PER BIS-2000 METHOD

Location:

L_x	=	3.58	m
L_y	=	4.06	m
f_{ck}	=	25	N/mm²
f_y	=	415	N/mm²
L_y/L_x	=	1.13	

Two Way Slab

Span	=	3.58	m	Span/32
Slab thickness	=	125	mm	111.9
Cover		20	mm	
Effective depth		105	mm	
Concrete wt	=	25	kN/m³	
Live Load on Slab	=	2	kN/m²	
Floor finish	=	1.5	kN/m²	

Design Load:

slab weight	=	3.125	kN/m²
Live + Floor finish Load	=	3.5	kN/m²
Total Load	=	6.63	kN/m²

$M_x = a_x w l^2_x$

$M_y = a_y w l^2_x$

As per IS456-2000-Table 26-Page No:91

Negative Moment at edge

L_y/L_x = 1.13

a_y = 0.047

		Ly/Lx		For
		1.1	1.2	1.13
Negative Moment @ edge	a_x	0.047	0.053	0.049
Positive Moment at mid span	a_x	0.035	0.040	0.037

				M_{ux}	M_{uy}
M_x	=	4.16	kNM	6246477.975	
M_y	=	3.99	kNM		5986059.8
Maximum Bm	=	4.16	kNM		
"d" - reqd under compression	=	42.55	<	105	mm
			Safe		

			M_{ux}	M_{uy}	
$M_u/b.d^2$	=		0.57	0.54	N/mm²

As per SP16, Table 2,Page 48,

P_t	=	%	**0.161**	**0.154**
Area of steel	=	mm²	169.39	162.14

Adopt

Y	10	140	mm C/C	10	140	mm C/C	
	560.93	>	169.39	560.93	>	162.14	
		Safe			Safe		

Positive Moment at mid span

a_y = 0.043

				M_{ux}	M_{uy}
M_x	=	3.12	kNM	4674719.25	
M_y	=	3.65	kNM		5476607.9
Maximum Bm	=	**3.651**	kNM		

		M_{ux}	M_{uy}	
$M_u/b.d^2$	=	0.42	0.50	N/mm²

As per SP16, Table 2,Page 48,

P_t	=	%	**0.120**	**0.141**
Area of steel	=	mm²	125.88	148.00

Adopt

Y	10	140	mm C/C	10	140	mm	
	560.93	>	125.88	560.93	>	148.0	

S.Subramaniam, M.S.(Struc)., PDQS, DRTM.
Registered Structural Engineer Grade-I.
(SE / GR-I / 2024 / 02 / 008).
New No: 14, Old No. 17A, Kan
Ganga Nagar, Jafferkhanpet, Ashok Nagar,
Chennai - 83, Ph : 24749439, 9500074947
kannmarconsultants@gmail.com

Safe Safe

Check for Shear strength

As per clause 40.2 (P72) T_c Max = 0.62 *sqrt(F_{ck})

of IS 456-2000 = 0.62 | 5

= 3.10 N/mm²

For slab as per 40.2.3.1 T_c Max = 0.5*$T_c$max

= 0.50 | 3.10

T_c Max = 1.55 N/mm²

Percentage of steel P_t = **0.53 %**

Shear strength = k t_c

Permissible shear stress in concrete (kt_c) for solid slabs in limit state design method

Ref IS 456:2000 Cl 40.2.1.1, Table 19

f_{ck} N/mm²	p_t %	D of slab	k	k t_c N/mm²
25	0.53	125	1.30	0.65

Now,kTc k t_c = 0.65 < 1.55 N/mm²

Safe

Nominal Shear stress T_v = V_u/b d

V_u = 17.7313 kN

T_v = 0.17 < 1.55 N/mm²

Safe

T_v < kT_c

Safe

Check for Defflection

Live Load 2 < 3.01 kN/m²

Defflection calculation is Not Necessary

A_{st} required = 135.88 mm²

A_{st} Provided = 560.93 mm²

Steel stress for service Load f_s = 0.58 f_y X A_{st} required / A_{st} Provided

As per Fig-4,IS 456-2000,Page38

= 0.58 | 415 | 135.88 / 560.93

F_s = 54.01 N/mm²

Percentage of steel provided = 0.53 %

Modification factor-Fig-4

Asper IS 456-2000-Page 38

f_y N/mm²	f_s N/mm²	$P_{t\,req}$	$P_{t\,prov}$ %	MF_t IS 456 Fig 4
415	54.01	0.12	0.53	2.00

Effective depth ratio

For,Simply supported = 20

Continues = 26

Cantilever =

(Lx/d) Max = 26 x 2.000

= 52.00

(Lx/d)Provided = 580 / 105

= 5.5195

(Lx/d) Max 52 > 5.10 (Lx/d)Provided

Safe

Maximum diameter of bars for slabs

Ref IS 456-2000 Cl 26.5.2.2

D of slab mm	dia of bar mm	Result Cl 26.5.2.2
125	10	Ok

S. Subramaniam, M.S.(Struc)., PDQS, DRTM.
Registered Structural Engineer Grade-I.
(SE / GR-I / 2024 / 02 / 008).
New No: 14, Old No. 17A, Kan
Ganga Nagar, Jafferkhanpet, Ashok Nagar,
Chennai - 83, Ph : 24749439, 9500074947
kannmarconsultants@gmail.com

Kannimar Consultants,
Chennai
24749439

STAIRECASE -DOG LEGGED MODEL

Location:

L_x	=	5.21	m	
F_{ck}	=	25	N/mm^2	
F_y	=	415	N/mm^2	
Step weight		20	kN/m^3	
Landing width	=	1.05		
Slope length	=	3.11		
Step tread	=	0.25	m	
Step riser	=	0.165	m	
Slope length for one step	=	0.300	m	
Number of tread	=	3.11 / 0.25		
	=	12.44	No	
Say	=	11	No	
Aditional slope length per flight	=	11	x	0.050
	=	0.54		
Effective length	=	5.75	m	
Concrete wt	=	25	kN/m^3	
Waist slab thickness	=	0.140	m	(Assumed)

Loads:

Dead load of Waist slab	=	3.5	kN/m^2	
Ceiling finish	=	0.25	kN/m^2	
Sub total	=	3.75	kN/m^2	
Dead Load on plan area	=	3.75 x 0.300 / 0.25		
	=	4.49	kN/m^2	
Brick load	=	0.165 x 20 / 2		
		1.65	kN/m^2	
Live load	=	3	kN/m^2	
Floor finish	=	1.5	kN/m^2	
Total load on staire	=	10.64	kN/m^2	

Maximum BM($w \times l^2/12$)	=	10.64 x 5.75^2 / 12		
	=	29.37	kN.M	
M_u	=	1.5 x	29374568	
		44061851.89	Nmm	

44061851.89		
0.138	25	1000

	12771.55		
sqrt	=	113.01	mm
Cover	=	20.00	mm
Total	=	133.01	mm
Provide	=	140.00	mm
d		117.00	

$M_u/b.d^2$

44061851.89		
1000.00	117.00	117.00

3.22

As per SP16, Table 2,Page 48,

P_1	=	1.089	%			
Area of steel	=	1.088707773	x	1000	x	117.00

S. Subramaniam, M.S.(Struc)., PDQS, DRTM.
Registered Structural Engineer Grade-I.
(SE / GR-I / 2024 / 02 / 008).
New No: 14, Old No. 17A, Kan
Ganga Nagar, Jafferkhanpet, Ashok Nagar,
Chennai - 83, Ph : 24749439, 9500074947
kannimarconsultants@gmail.com

Kannimar Consultants,
Chennai
24749439

100

= 1273.79 mm^2

Adopt

Y 16 140 **mm C/C**

1436 > 1274 mm^2

Safe

Distributer:

Provide minimum steel = 0.12%

0.12	1000	117.00
	100	

= **140.4** mm^2

Adopt

Y 10 150 **mm C/C**

524 > 140 mm^2

Safe

Check for Shear strength

As per clause 40.2 (P72)
of IS 456-2000

Percentage of steel P_t = $\frac{1435.98 \times 100}{1000 \times 117.00}$

P_t = **1.23 %**

Shear strength = kT_c

k = 1.2

IS456-2000,Page73,table19

% of steel	T_c
1	0.64
1.25	0.7

For **1.23** 0.69 N/mm^2

kT_c = 1.200 x 0.695

0.833

Nominal Shear stress T_v = $V_u/b.d$

V_u

1.5	5.75	10.64
	2	

V_u = 45.938 kN

T_v $\frac{45.938 \times 1000}{1000 \times 117.00}$

T_v = 0.3926 < 0.8335

T_v < kT_c

SAFE

SUMMARY

Waist slab thick = **140.00 mm**

Main Rebar = Y 16 @ 140 **mm C/C**

Distributer = Y 10 @ 150 **mm C/C**

S. Subramaniam, M.S.(Struc)., PDQS, DRTM.
Registered Structural Engineer Grade-I.
(SE / GR-I / 2024 / 02 / 008).
New No: 14, Old No. 17A, Kan
Ganga Nagar, Jafferkhanpet, Ashok Nagar,
Chennai - 83, Ph : 24749439, 9500074947
kannimarconsultants@gmail.com

Kannimar Consultants
Chennai
24749439

SUNSHADE DESIGN

1	Grade of concrete	F_{ck}	=	**25**	N/mm^2	
2	grade of steel	Fy	=	**415**	N/mm^2	
3	Width of sunshade		=	**0.6**	m	
4	Sunshade thickness -	t_{max}	=	0.075	m	**75** mm
		t_{min}	=	0.1	m	**100** mm
		average	=	0.0875		87.5
		cover	=	0.014		**15**
		effective depth d	=	0.061	m	61 mm
5	Self weight of sunshade		=	2.19	kN/m^2	
	Finishes		=	1	kN/m^2	
	Live load		=	0.75	kN/m^2	
			Total	3.94	kN/m^2	
6	Maximum BM	$W L^2/2$	=	0.71	kN.M	
		"d" req	=	16.02	<	61 mm
					SAFE	
7.	M_u/bd^2		=	**0.29**	N/mm^2	
		P_t	=	**0.085**		
	Area of steel		=	51.85	mm^2	
	Adopt					
		Y 10		**140**	**mm C/C**	
		560.93	>	51.85	mm^2	
			Safe			

S. Subramaniam, M.S.(Struc)., PDQS, DRTM.
Registered Structural Engineer Grade-I.
(SE / GR-I / 2024 / 02 / 008).
New No: 14, Old No. 17A, Kan
Ganga Nagar, Jafferkhanpet, Ashok Nagar,
Chennai - 83, Ph : 24749439, 9500074947
kannimarconsultants@gmail.com

Column Schedule

Legend	Column	Tie Arrangement
Column C1 Size 300 X 675	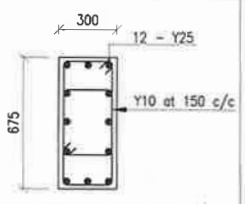	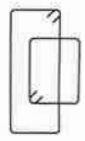

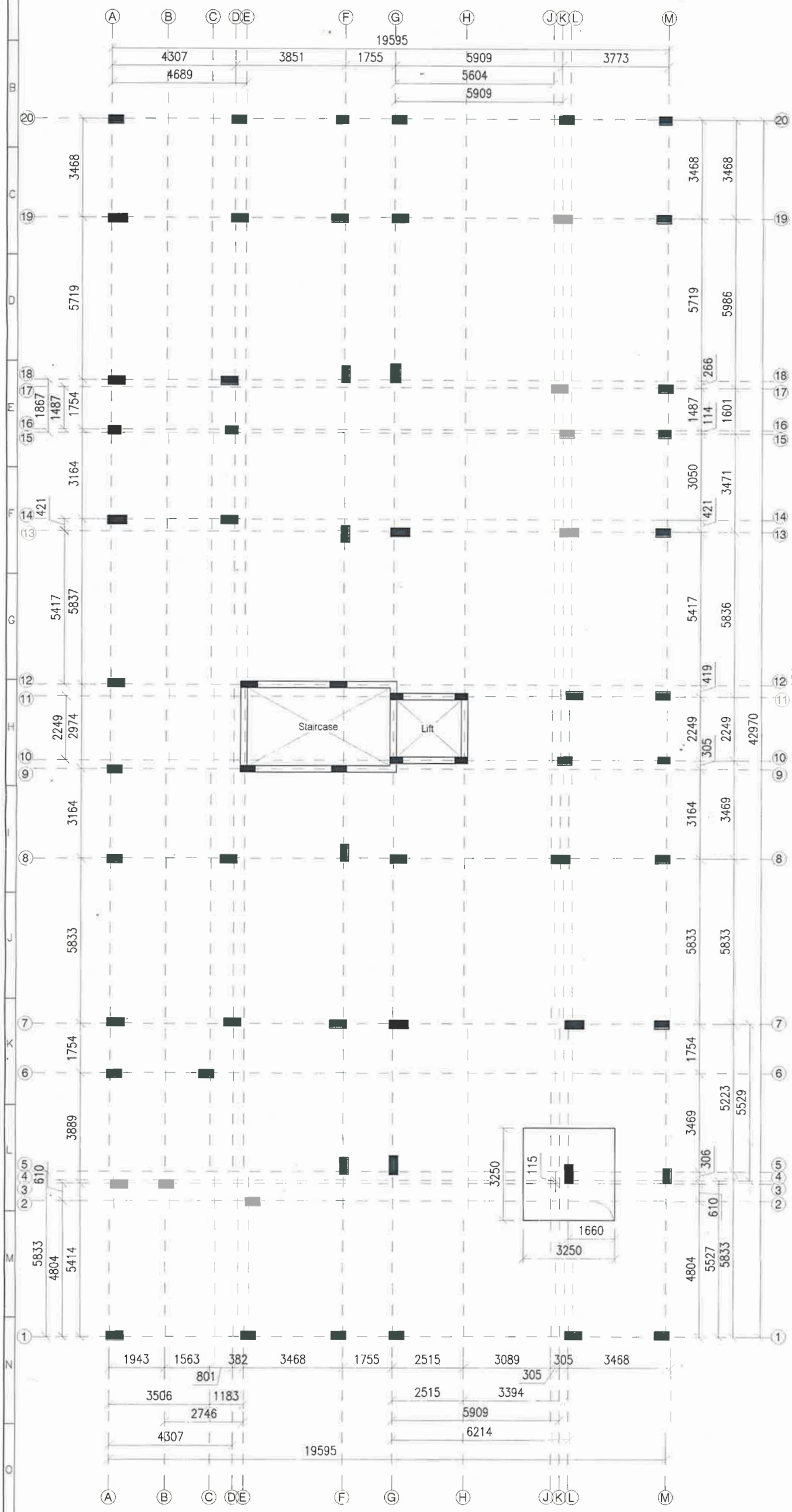

Column & Foundation Layout

(Stilt + 5)

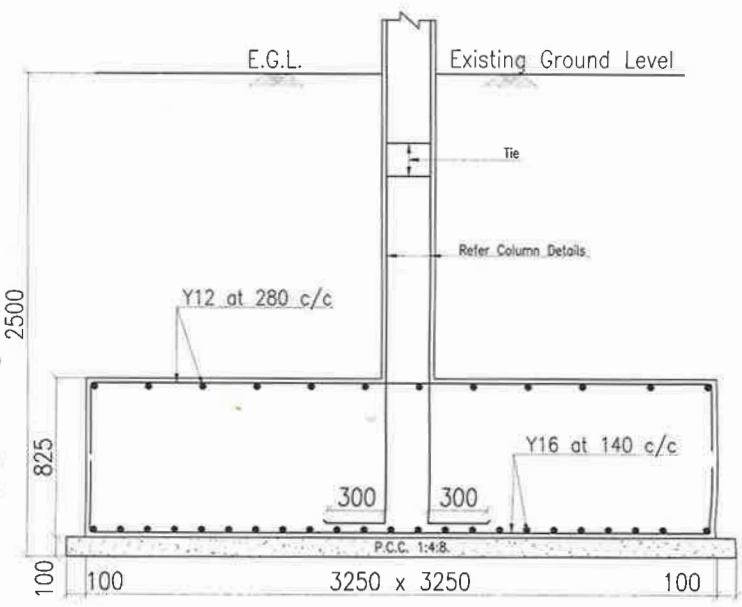

C.S. of Footing F1
Size 3250 X 3250

S. Subramaniam, M.S.(Struc)., PDQS, DRTM.
Registered Structural Engineer Grade-I.
(SE / GR-I / 2024 / 02 / 008).
New No: 14, Old No. 17A, Kannimar Villa,
Ganga Nagar, Jafferkhanpet, Ashok Nagar,
Chennai - 83, Ph : 24749439, 9500074947
kannimarconsultants@gmail.com

PLAN SHOWING THE PROPOSED CONSTRUCTION OF STILT FLOOR + 4 FLOORS + 5TH FLOOR(PT) (HEIGHT – 18.30 M) RESIDENTIAL BUILDING WITH 37 DWELLING UNITS (AVAILING AFFORDABLE HOUSING BENEFIT) AT VIGNARAJAPURAM 2ND MAIN ROAD , VENGAIVASAL, CHENNAI 600126,COMPRISED IN OLD S.NO.41/4B4 & 41/4B5 , AS PER PATTA NEW S.NO.41/4B4A2 & 41/4B5A2 OF VENGAIVASAL VILLAGE WITHIN THE LIMITS OF ST.THOMAS MOUNT, PANCHAYAT UNION.

Notes:

1. All Dimensions Are In MM.
2. Use Fe415/Fe500 Grade Steel.
3. Use Mix M25 For all Works
4. Clear Cover To The Reinforcement For Footing:50mm Column:40mm,Beam:30mm,Slab:20mm,Rcc Wall:20mm.

Kannimar Consultants
Engineering Project Consultants
Structural Design
New No : 14,Old No . 17A, Kannimar Villa,
Ganga Nagar,Jafferkhanpet,Ashok Nagar,
Chennai- 83.Ph: 24749439/89 , 95000-74947
kannimarconsultants@gmail.com

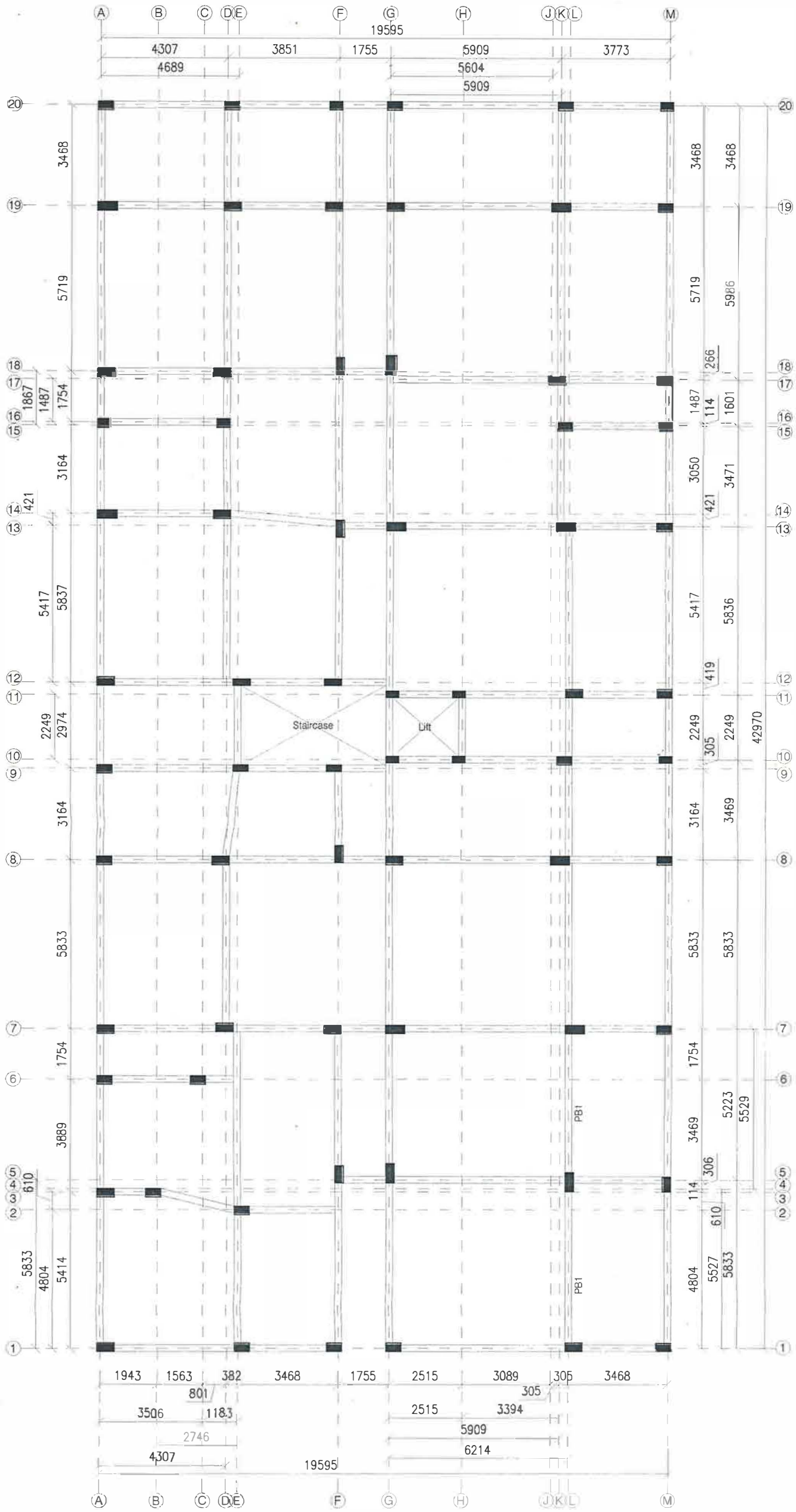

Plinth beam layout

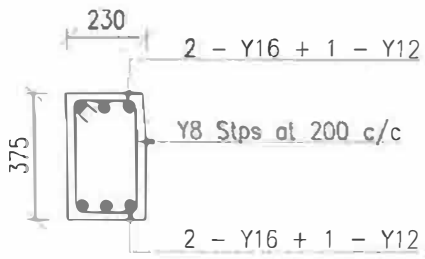

C.S of Plinth Beam PB1
Size 230 x 375

S. Subramaniam, M.S.(Struc)., PDQS, DRTM.
Registered Structural Engineer Grade-I.
(SE / GR-I / 2024 / 02 / 008).
New No: 14, Old No. 17A, Kannimar Villa,
Ganga Nagar, Jafferkhanpet, Ashok Nagar,
Chennai - 83, Ph : 24749439, 9500074947
kannimarconsultants@gmail.com

PLAN SHOWING THE PROPOSED CONSTRUCTION OF STILT FLOOR + 4 FLOORS + 5TH FLOOR(PT) (HEIGHT – 18.30 M) RESIDENTIAL BUILDING WITH 37 DWELLING UNITS (AVAILING AFFORDABLE HOUSING BENEFIT) AT VIGNARAJAPURAM 2ND MAIN ROAD , VENGAIVASAL, CHENNAI 600126,COMPRISED IN OLD S.NO.41/4B4 & 41/4B5 , AS PER PATTA NEW S.NO.41/4B4A2 & 41/4B5A2 OF VENGAIVASAL VILLAGE WITHIN THE LIMITS OF ST.THOMAS MOUNT, PANCHAYAT UNION.

Notes:

1.	All Dimensions Are In MM.
2.	Use Fe415/Fe500 Grade Steel.
3.	Use Mix M25 For all Works
4.	Clear Cover To The Reinforcement For Footing:50mm Column:40mm,Beam:30mm,Slab:20mm,Rcc Wall:20mm.

Kannimar Consultants
Engineering Project Consultants
Structural Design
New No : 14,Old No . 17A, Kannimar Villa,
Ganga Nagar,Jafferkhanpet,Ashok Nagar,
Chennai- 83.Ph: 24749439/89 , 95000-74947
kannimarconsultants@gmail.com

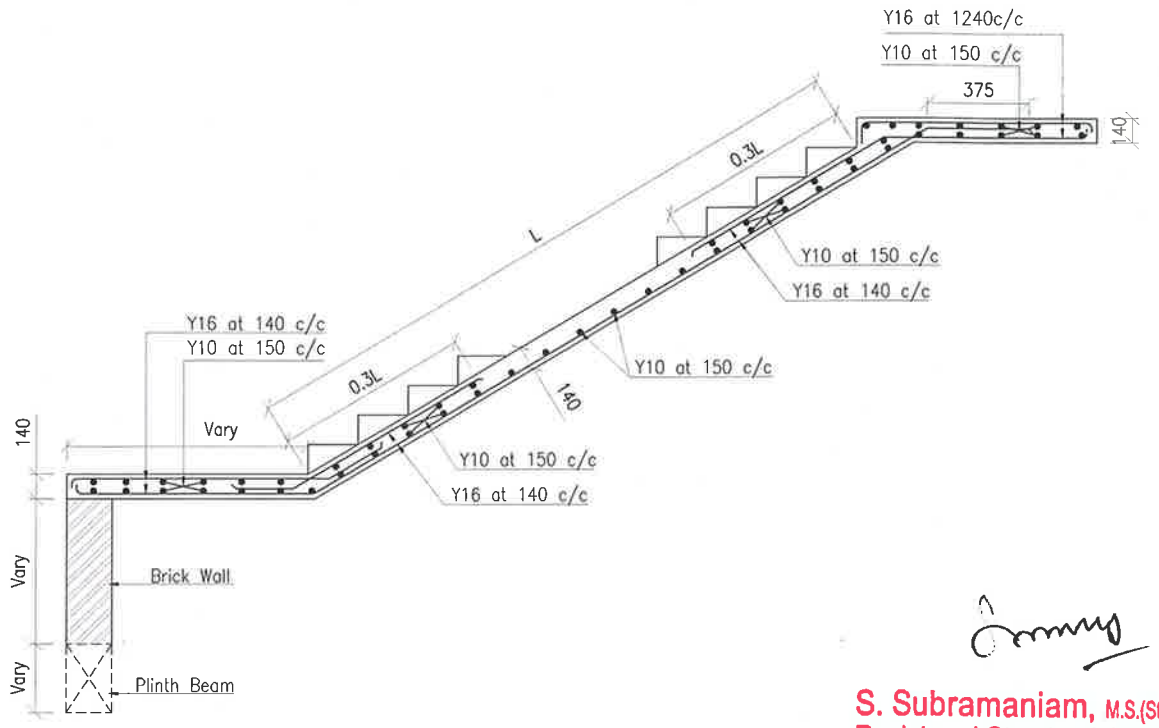

C.S. of Staircase Details

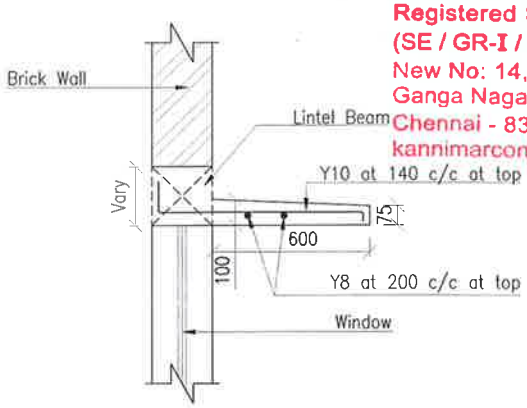

Sunshade Detail (Typ)

S. Subramaniam, M.S.(Struc)., PDQS, DRTM.
Registered Structural Engineer Grade-I.
(SE / GR-I / 2024 / 02 / 008).
New No: 14, Old No. 17A, Kannimar Villa,
Ganga Nagar, Jafferkhanpet, Ashok Nagar,
Chennai - 83, Ph : 24749439, 9500074947
kannimarconsultants@gmail.com

Notes:

1.	All Dimensions Are In MM.
2.	Use Fe415/Fe500 Grade Steel.
3.	Use Mix M25 For all Works
4.	Clear Cover To The Reinforcement For Footing:50mm Column:40mm,Beam:30mm,Slab:20mm,Rcc Wall:20mm.

PLAN SHOWING THE PROPOSED CONSTRUCTION OF STILT FLOOR + 4 FLOORS + 5TH FLOOR(PT) (HEIGHT – 18.30 M) RESIDENTIAL BUILDING WITH 37 DWELLING UNITS (AVAILING AFFORDABLE HOUSING BENEFIT) AT VIGNARAJAPURAM 2ND MAIN ROAD , VENGAIVASAL, CHENNAI 600126,COMPRISED IN OLD S.NO.41/4B4 & 41/4B5 , AS PER PATTA NEW S.NO.41/4B4A2 & 41/4B5A2 OF VENGAIVASAL VILLAGE WITHIN THE LIMITS OF ST.THOMAS MOUNT, PANCHAYAT UNION.

Kannimar Consultants
Engineering Project Consultants
Structural Design
New No : 14,Old No . 17A, Kannimar Villa,
Ganga Nagar,Jafferkhanpet,Ashok Nagar,
Chennai- 83.Ph: 24749439/89 , 95000-74947
kannimarconsultants@gmail.com