Design Report & Stability Certificate

Site Address

The Proposed Construction of a Residential Building (Stilt+5 Floors With 12 Dwelling Units) at Plot No: 7 & 8 , 8 th Street , Nanganallur , Chennai - 600 061. Comprised in Old Survey No: 93 / 7 Part , Town Survey No: 53 & 54 , Block No: 14 , Ward- E of Adambakkam Village With in Greater Chennai Corporation Limit .

S.Subramaniam, MS.(Struc).PDQS.DRTM.
Registered Structural Engineer Grade – 1
CMDA : (SE/GR-I/19/02/008)
Corporation: RSE100122019

Kannimar Consultants

Industrial Building Consultants
Structural Design

New No. 14, Old No.17A, Kannimar Villa, Ganga Nagar, Jafferkhanpet, Ashok Nagar, Chennai – 83. Ph: 24749439, 95000 74947.
E – mail : kannimarconsultants@gmail.com

S. Subramaniam, M.S.(Struc)., PDQS, DRTM.
Registered Structural Engineer Grade-I.
(SE / GR-I / 2024 / 02 / 008).
New No: 14, Old No. 17A, Kan
Ganga Nagar, Jafferkhanpet, Ashok Nagar,
Chennai - 83, Ph : 24749439, 9500074947
kannimarconsultants@gmail.com

KC-6178

Kannimar Consultants
Industrial Building Consultants
Structural Design
New No. 14, Old No. 17A, Kannimar Villa, Ganga Nagar, Jafferkhanpet,
Ashok Nagar, Chennai - 83. Ph. : 24749439, 94441 83538, 9500074947

S. Subramaniam, M.S. (Struc). PDQS. DRTM.
Chartered Engineer
Registered Structural Engineer Grade - I
E-mail : kannimarconsultants@gmail.com

Stability Certificate

It is certified that The Proposed Construction of a Residential Building (Stilt+5 Floors With 12 Dwelling Units) at Plot No: 7 & 8 , 8 th Street , Nanga Nallur , Chennai - 600 061. Comprised in Old Survey No: 93 / 7 Part , Town Survey No: 53 & 54 , Block No: 14 , Ward- E of Adambakkam Village With in Greater Chennai Corporation Limit is Designed For Stilt + 5 Floors to resist for earthquake, check has been made and found safe and sound

and I hereby certify that

- The Minimum grade of concrete is M25.
- The design analysis using the code of practice for loading standards as per IS-875 part and seismic force as per the IS 1893 & IS456-2000
- The above said building is designed for earthquake forces of Zone III. The relevant BIS codes were used for its design. Hence it is certified that the above said building is safe in its life circle against the forces like Service loads as well as seismic forces as per specifications given in Zone III of BIS 1893
- Minimum size of the column is 300 mm

S. Subramaniam, M.S.(Struc)., PDQS, DRTM.
Registered Structural Engineer Grade-I.
(SE / GR-I / 19 / 02 / 008).
New No: 14, Old No. 17A, Kannimar Villa,
Ganga Nagar, Jafferkhanpet, Ashok Nagar,
Chennai - 83, Ph : 24749439, 9500074947
kannimarconsultants@gmail.com

Kannimar Consultants
Chennai
24749439

Load calculation

Building Name: Flats
Number of Floor: Stilt + 5

Concrete Unit wt	25	kN/m^3
Brick work	20	kN/m^3
Live load -rooms	2	kN/m^2
Live load -stair&cordr	3	kN/m^2
Floor finish	1	kN/m^2
Floor Height		

Stilt floor	=	3 m	Parking
First floor	=	3.05 m	Resi
Second floor	=	3.05 m	Resi
Third floor	=	3.05 m	Resi
Fourth floor		3.05	Resi
Fifth floor		3.05	Resi
Head room	=	2.8 m	

Load on Column **column** **E4** X= 5.71 Y = 4.21

Sl. No	Description	No	L	B	D	Qty	UnitLoad	Total Load
	Ground floor							
1	Column Load	1	0.3	0.6	6	1.08	25	27.00
2	Plinth beam	1	9.92	0.23	0.375	0.86	25	21.39
3	Roof beam	1	5.71	0.23	0.475	0.62	25	15.60
		1	4.21	0.23	0.325	0.31	25	7.87
4	Roof slab	1	5.71	4.21	0.125	3.00	25	75.12
5	Live load-all area	1	5.71	4.21	1	24.04	2	48.08
6	Floor finish	1	5.71	4.21	1	24.04	1.5	36.06
7	BW: up to FFL	1	4.61	0.23	0.75	0.80	20	15.90
8	BW: Above FFL							
	230 thick	1	0	0.25	0	0.000	20	0.00
	115 thick	1	0	0.15	0	0.000	20	0.00
								247.02
	First floor/Typical Floor							
1	Column Load	1	0.3	0.6	3.05	0.549	25	13.73
2	Roof slab	1	5.71	4.21	0.125	3.005	25	75.12
3	Roof beam	1	5.71	0.23	0.475	0.624	25	15.60
		1	4.21	0.23	0.325	0.315	25	7.87
4	Live load-all area	1	5.71	4.21	1	24.039	2	48.08
5	Floor finish	1	5.71	4.21	1	24.039	1.5	36.06
6	Brick wall-230 thick	1	4.21	0.25	2.6	2.737	20	54.73
7	Brick wall 115 thick	1	5.71	0.15	2.45	2.098	20	41.97
	Additional load	1	3	2.5	0.2	1.500	25	37.50
		First floor/Typical Floor						**330.65**
	Parapet load							
1	Brick wall	1	0	0.25	1	0	20	0
2	Weathering coarse material	1	5.71	4.21	0.1	2.40	20	48.08
		Parapet load						**48.08**

COLUMN TOTAL LOAD **column** **E4**

Sl.No	Description	Load	
1	Stilt floor	247.02	
2	First floor	330.65	
3	Second floor	330.65	
4	Third floor	330.65	
5	Fourth floor	330.65	
6	Fifth floor	330.65	
7	Terrace	48.08	
8	Total	1948.32	
	Say	200.00	Mt

S. Subramaniam, M.S.(Struc)., PDQS, DRTM.
Registered Structural Engineer Grade-I.
(SE / GR-I / 19 / 02 / 008).
New No: 14, Old No. 17A, Kannimar Villa,
Ganga Nagar, Jafferkhanpet, Ashok Nagar,
Chennai - 83. Ph : 24749439, 9500074947
kannimarconsultants@gmail.com

Kannimar Consultants,
Chennai
24749439

COLUMN DESIGN

Column load as per load calculation		=	200	Mt			
Long Column design as per IS456-2000, Page 71							
Factored Load	P_u	=	$C_r(0.4\ f_{ck}.\ A_c + 0.67\ f_y.\ A_{sc})$				
Working load	P	=	$P_u/1.5$				
	C_r	=	1.25 - [(l_e/D)/48]				

PROCEDURE:

	F_{ck}	=	25	N/mm²			
	F_y	=	415	N/mm²			
Length of column	L	=	3.6	m			
	l_e	=	3.06	m	0.85* L		
	C_r	=	0.97				
Modulus of elasticity of concrete	E_c	=	25000.00	N/mm²			
Ref IS 456-2000 Cl 6.2.3.1							
Flexural strength of concrete	f_{cr}	=	3.50	N/mm²			
Ref IS 456-2000 Cl 6.2.2							
Maximum shear stress in concrete for limit state method of design							
Ref IS 456-2000 Table 20 Cl 40.2.3	$f_{c\,max}$	=	3.1	N/mm²			
Permissible bearing stress		=	0.45*Fck				
		=	0.45	x	25		
Permissible bearing stress		=	11.25	N/mm²			
Column size		=	300	600	mm		
Minimum Eccentricity,e		=	L/500 + Lateral dimension/30				
One direction		=	17.20	mm			
Another Direction		=	27.20	mm			
Minimum eccentricity		=	20	mm			
Consider Minimum Eccentricity		=	27.20	mm			
	0.05*b	=	15.00		<		27.20
Area of column		=	180000	mm²			
Number of rod		=					
		=	5	25	2454.06	mm²	
		=	5	25	2454.06	mm²	
Area of Steel(A_{sc})		=	4908.13	mm²			
Area of Concrete(A_c)		=	175091.88	mm²			
	P_u	=	3030959.24	N			
	P	=	2020639.494	N			
	Say	=	**202.06**	**Tonne**			
% of Reinforcement	**0.8**	<	**2.73**	<	**4**	%	
		SAFE		SAFE			
Column Load	202.06	>	200.00	**Mt**			
		SAFE					

Lateral Ties:

As per IS 456-2000; Clause 26.5.3.2.c-Page 49

Diameter shall not be less than		=	25 / 4				
		=	6.25	mm dia			
Provide		=	8	mm dia			

Spacing

Shall not be more than following							
Least dimension of column		=	300	mm			
16x Smallest dia of column rod		=	400	mm			
Not more than		=	300	mm			
Minimum of above		=	**300**	mm			
Provide	8	@	150	mm C/c			

Development length in compression

	Ld	=	Ø *σs / 4*T_{bd}				
	Ø	=	Dia of bar	=	25.00	mm	
(Fy/1.15)	σs	=	Stress in bar	=	360.87	N/mm²	(0.87*Fy)
Page 43,26.2.1.1	T_{bd}	=	Bond stress	=	2.8	N/mm²	
	Ld	=	25 / 4	360.8696 / 2.8			
	Ld	=	805.512	mm			

S. Subramaniam, M.S.(Struc)., PDQS, DRTM.
Registered Structural Engineer Grade-I.
(SE / GR-I / 2024 / 02 / 008).
New No: 14, Old No. 17A, Kan
Ganga Nagar, Jafferkhanpet, Ashok Nagar,
Chennai - 83, Ph : 24749439, 9500074947
kannimarconsultants@gmail.com

Kannimar Consultants.
Chennai
24749439

SUMMARY

Column size		=	300	x	600
Rebar		=	5	25	
			5	25	
Lateral tie	8	@	**150**	mm C/c	

Bond stress for **Compression** 43.IS 456-2000

Grade of concrete	Type	M20	M25	M30	M35	M40 & above
Design Bond Stress.N/mm²	Plain	1.5	1.75	1.875	2.125	2.375
	Deformed	2.4	2.8	3	3.4	3.8

S. Subramaniam, M.S.(Struc)., PDQS, DRTM.
Registered Structural Engineer Grade-I.
(SE / GR-I / 2024 / 02 / 008).
New No: 14, Old No. 17A, Kan
Ganga Nagar, Jafferkhanpet, Ashok Nagar,
Chennai - 83, Ph : 24749439, 9500074947
kannimarconsultants@gmail.com

ISOLATED FOOTING- Regular

Load on Column(P)	=	2000 kN			
Ultimate column Load Pu = (1.5 xP)	=	1.5	x	2000	
		3000 kN			
Self Weight of footing(0.1P)	=	0.1	x	2000	
		200 kN			
Total Load on column for footing design		2000	+	200	
		2200			
SBC of soil	=	250 kN/m^2			
f_{ck}	=	25 N/mm^2			
f_y	=	415 N/mm^2			
T_c max	=	3.1 N/mm^2		IS456-2000, P73	
$X_{u\,max}/d$	=	0.48		IS456-2000, P70	
Mu limit/ fck x b x dx d =	=	0.149			
Assume footing depth	=	750 mm			
Column Size	a	0.3 m		300 mm	
	b	0.6 m		600 mm	
Area of footing, A	=	2200 / 250.00			
	=	8.80 m^2			
Size of footing		2.97 m			
Adopt footing size	L	3 m		B	3 m
Footing area provided		9.00 m^2			
Net upward pressure(P/A)	p	222.22	<	250 kN/m^2	
			SAFE		
Ultimate Design Pressure	(1.5 xp)	333.33 kN/m^2			

Depth Required for B M Consideration

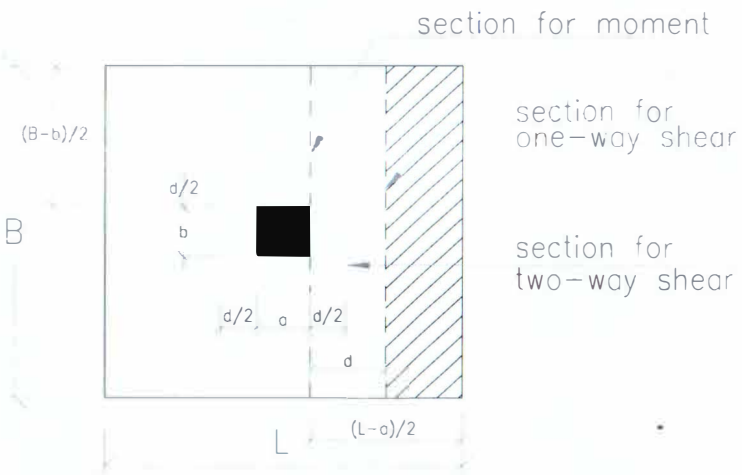

S. Subramaniam, M.S.(Struc)., PDQS, DRTM.
Registered Structural Engineer Grade-I.
(SE / GR-I / 2024 / 02 / 008).
New No: 14, Old No. 17A, Kan
Ganga Nagar, Jafferkhanpet, Ashok Nagar,
Chennai - 83, Ph : 24749439, 9500074947
kannmarconsultants@gmail.com

Max. BM along column edge = $\frac{P \times B \times (L-a)^2}{8}$

p = 222.22

B = 3

L-a = 3 - 0.3 = 2.7

$(L-a)^2$ = 7.29

BM = $\frac{222.22 \times 3 \times 7.29}{8}$

= 607.5

Max. BM = 607.50 kN.m

M_u(1.5 xBM) = 911.25 kN.m

d^2 = $\frac{Mu}{0.36f_{ck}\,(X_u/d)(1-.416X_u/d)1000}$

d^2 = $\frac{911250000.00}{3457.38}$

d^2 = 263566.45

d = **513.39 mm**

D = 750 mm Safe

d = 702 mm 0.702 m

Area of Tension steelfor BM

$BM = 0.87 \times F_y \times A_t\,(d - Fy \times A_t / F_{ck} \times b)$

911250000 = 253457.1 A_t - 1.998 A_t^2

a = 1.998

b = 253457.1

c = 911250000

2a = 4.00

b^2 = 64240501540

4ac = 7282017450

sqrt of b^2-4ac = 238659.7664

A_t = 3703.39 mm^2

Per Rm = 1234.46 mm^2

Minimum Rebar 0.12% = 842.4 mm^2

Adopt = 1234.46 mm^2

16 mm 140 mm c/c

1436.0 > 1234.5 mm^2 Per Rm

The design is Safe

P_t = **0.20 %**

Depth Required for Punching shear

Single Shear :Critical section is taken at distance "d" from the face of the column

Shear Force V = Shear area x Pressure

Shear area L = 3 m

b = 0.65 m

area = 1.94

V = 222.22 x 1.94

V = 432.00 kN

V_u = 1.50 x 432.00

V_u = 648.00 kN

T_v = $\frac{V_u}{bd}$

= $\frac{648000}{3000 \times 702}$

Nominal Shear Stress T_v = 0.308 N/mm^2

S. Subramaniam, M.S.(Struc)., PDQS, DRTM.
Registered Structural Engineer Grade-I.
(SE / GR-I / 2024 / 02 / 008).
New No: 14, Old No. 17A, Kan
Ganga Nagar, Jafferkhanpet, Ashok Nagar,
Chennai - 83, Ph : 24749439, 9500074947
kanmarconsultants@gmail.com

Percentage of steel provided	P_t	=	0.20	%
Shear strength of concrete	T_c	=		
Percentage of steel	P_t	=	0.20	%
Shear strength		=	kT_c	
	k	=	1	

Table19,page 73,IS 456-2000

% of steel	T_c
0.25	0.36
0.5	0.49

	For	0.20	0.34	
Now,kTc		=	0.34	N/mm^2
	0.308	<	0.34	N/mm^2
	T_v	<	kT_c	

The design is **Safe**

Double Shear :Critical section is taken at distance "0.5d" from the face of the column

Footing area		=	3	x	3
		=	9 m^2		
Critical section area		=	1.002	x	1.302
		=	1.30 m^2		
Net area		=	9.00	-	13 0
		=	7.70 m^2		
Shear Force		=	Shear area	x	Pressure
			7.70	x	222.22
	V		1710.09 kN		
	V_u	=	1.50	x	1710.09
Shear Force		=	2565.13 kN		
	T_v	=	V_u		
		=	bd		
	b	=	4608 mm		
	d	=	702		
		=	2565132		
		=	4608	x	702
Nominal Shear Stress		=	0.79 N/mm^2		
	T'_c	=	$K_s.T_c$		
	K_s	=	0.5+Bc		
	Bc	=	0.50	(a/b)	
	K_s	=	1.00		
Ks Not more than		=	1		
	K_s	=	1		
	Tc	=	1.250	(0.25*sqrtFck)	
	T'_c	=	1.250		
	Tv	<	T'_c		
	0.79	<	1.250	N/mm^2	

SAFE

SUMMARY

Footing Size	=	**3**	x	**3**	M
Footing concrete depth	=			**750**	mm
Footing rod	=	**16**	@	**140**	mm c/c

S. Subramaniam, M.S.(Struc)., PDQS, DRTM.
Registered Structural Engineer Grade-I.
(SE / GR-I / 2024 / 02 / 008).
New No: 14, Old No. 17A, Kan
Ganga Nagar, Jafferkhanpet, Ashok Nagar,
Chennai - 83, Ph : 24749439, 9500074947
kannimarconsultants@gmail.com

Kannimar Consultants
Chennai
24749439

PLINTH BEAM

Span	=	7.66	m
Wall thickness-Below basement	=	0.23	m
Wall height	=	0.75	m
Wall thick-above basement	=	0.25	m
Wall height	=	0	m

Beam Size b	=	230	mm			
D	=	450	mm	l/16	**479**	mm
d'	=	46	mm	d'/d =	0.114	
d	=	404	mm			
F_y	=	415	N/mm²			
F_{ck}	=	25	N/mm²			

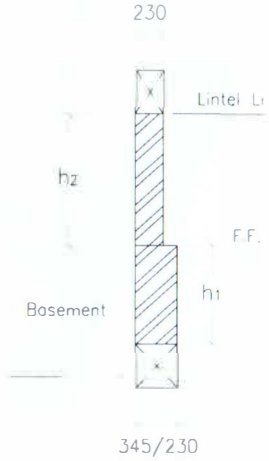

LOAD CALCULATIONS:

Self wt = b x D x 1 x 25	=	2.59	kN/m
Brick masonry weight below basement	=	3.45	kN/m
Brick masonry weight above basement	=	0	
Max Udl	w =	6.04	kN/m
Max B.M at Mid span	=	$(wl^2/20)$	

6.04	7.66	7.66
	20	

BM 17.71 kN.M

SF = wl/3 (0.5 x w x l)

6.04	x	7.66
	3	

SF 15.42 kN

M_u/bd^2 =

1.5	17.71	1000000
230.00	404	404

= **0.71** N/mm²

Refer SP 16 .Page 86.Pt = **0.203** % P_t = 0.1

A_{st} =

0.203	230	404
	100	

Ast = 189 mm² = 93 mm²

Provide

2	16		2	16	
1	12		1	12	
0	16		0	12	
"A_{st}" Provided	515.16	>	188.59	515.1568	> 92.92
		SAFE			**SAFE**

Min.Reinf = $(0.87 \times b \times d / F_y)$ mm²

=	0.870	230	404
		415	

Min.Reinf = 194.796 mm²

"A_{st}" Provided 515.2 > 194.8 mm²

SAFE

CHECK FOR SHEAR STRENGTH

T_c Max = 0.62 *sqrt(F_{ck})

0.62	5

= 3.10 N/mm²

As per clause 40.2 (P73) of IS 456-2000

Percentage of steel P_t = **0.55** %

Shear strength = kT_c

k = 1

% of steel	T_c
0.5	0.49
0.75	0.57

For 0.55 0.51

kT_c = 1.00 X 0.51

Now kT_c = 0.51 N/mm² < 3.10 N/mm²

SAFE

Nominal Shear stress T_v = $V_u/b.d$

V_u = 1.5 X 15.42

23.124 kN

T_v = $V_u/b.d$

T_v =

23.12	1000
230.00	404

T_v = 0.25 < 3.10 N/mm²

SAFE

0.25 < 0.51 N/mm²

T_v < kT_c

SAFE

Total shear strength V_u = 23123.63 N

Shear contribution by concrete $T_c.b.d$ =

0.51	230	404

47148.6176

Shear contribution by stps V_{us} = V_u - $T_c.b.d$

23123.63 - 47148.6

-24024.99 N

Provide Y 8 -610 mm C/C

Area or 2 legged stps a = 101 mm²

S. Subramaniam, M.S.(Struc)., PDQS, DRTM.
Registered Structural Engineer Grade-I.
(SE / GR-I / 2024 / 02 / 008).
New No: 14, Old No. 17A, Kan
Ganga Nagar, Jafferkhanpet, Ashok Nagar,
Chennai - 83, Ph : 24749439, 9500074947
kannimarconsultants@gmail.com

Kannimar Consultants
Chennai
24/49439

Spacing of stirrups = $\frac{0.87 \cdot Fy \cdot a \cdot d}{V_{us}}$

0.87	415	101	404
	-24024.99		

= -610 mm C/C

Provide shear Rebar without considering conc. shear Y 8 **634** mm C/C

Area of 2 legged stps a = 101 mm^2

= $\frac{0.87 \cdot Fy \cdot a \cdot d}{V_{us}}$

0.87	415	101	404
	23123.63		

= **634 mm C/C**

V_{us}/d =

24024.99	10
404.00	1000

= -0.595 kN/cm

Minimum Stirrups Reinforcement Y 8

A_{sv} = 100.52 mm^2

S_v = 0.87*Fy*Asv/0.4*a

0.87	415	101
0.4	230.00	

= $\frac{36292.16832}{92}$

= **394 mm** C/C

Maximum Spacing of Stirrups = 0.75 *d

= 303 mm

= 300 mm

Least of above 300 mm

			Y		8	
Provide	394	>	200	<	300	
		SAFE		**SAFE**		
	531	>	200	<	634	
		SAFE		**SAFE**		

Development length in Tension

Ld = $\frac{\varnothing \cdot \sigma s}{4 \cdot \tau_{bd}}$

Ø = Dia of bar = 16 mm

(0.87*Fy) σs = Stress in bar(Fy/1.15) = 360.87 N/mm^2

Page 43,26.2.1,i τ_{bd} = Bond stress = 2.24 N/mm^2

Ld = $\frac{16 \quad 360.8695652}{4 \quad 2.24}$

Ld = 644.4 mm

Bond stress for **tension** P 43,IS 456-2000

Grade of concrete	Type	M20	M25	M30	M35	M40 & above
Design Bond Stress,N/mm²	Plain	1.2	1.4	1.5	1.7	1.9
	Deformed	1.92	2.24	2.4	2.72	3.04

S. Subramaniam, M.S.(Struc)., PDQS, DRTM.
Registered Structural Engineer Grade-I.
(SE / GR-I / 2024 / 02 / 008).
New No: 14, Old No. 17A, Kan
Ganga Nagar, Jafferkhanpet, Ashok Nagar,
Chennai - 83, Ph : 24749439, 9500074947
kannimarconsultants@gmail.com

Centre Beam-Continues

Span	=	7.66 m			
Lateral span	=	4.21 m			
Wall height	=	2.45 m			
Wall thickness	=	0.15 m			
b	=	230 mm			
D	=	600 mm	l/12.5	**613**	mm
d'	=	50 mm	d'/d =	0.091	
d	=	550 mm			
f_y	=	415 N/mm²			
f_{ck}	=	25 N/mm²			

Slab Load:

Self wt	=	3.125	kN/m²	slab thk	0.125 m
Live Load	=	2	kN/m²		
Floor Finish	=	1.5	kN/m²		
Mish. Load	=	1	kN/m²		
		7.625	kN/m²		

Load Calculations:

Brick work/ AAC Block	=	**20**	kN/m³
Self wt = b x D x 1 x 25	=	3.45	kN/m
Brick work:	=	6.2475	kN/m
Udl for slab	=	23.28	kN/m
Max Udl	w =	32.98	kN/m

M_u Limit = $0.138\, f_{ck}\, bd^2$

0.138	25	230	302500

= 240033750.00 Nmm

240.03 < 263.86

M_u limit < M_u

Doubly Reinforced

"d" - reqd = 576.65 > 550 mm

Doubly reinforced

Max B.M at Mid span = $(wl^2/13)$

32.98	7.66	7.66
	13	

BM = 148.84 kN.M

M_u Midspan = **223.26 kN.M**

Max B.M at Support = $(wl^2/11)$

32.98	7.66	7.66
	11	

BM = 175.91 kN.M

M_u Support = **263.86 kN.M**

SF = wl/2 (0.5 x w x l)

32.98	x	7.66
	2	

SF **126.30 kN**

M_u/bd^2 @Mid span =

1.5	148.84	1000000
230.00	550	550

= **3.21** N/mm²

M_u/bd^2 @Support =

1.5	175.91	1000000
230.00	550	550

= **3.79 N/mm²**

Rebar @ Mid span

	P_t	P_c
Refer SP 16 ,Page 86,Pt =	1.084	0.54

1.084 %

A_{st} =

1.084	230	550
	100	

S. Subramaniam, M.S.(Struc)., PDQS, DRTM.
Registered Structural Engineer Grade-I.
(SE / GR-I / 2024 / 02 / 008).
New No: 14, Old No. 17A, Kan
Ganga Nagar, Jafferkhanpet, Ashok Nagar,
Chennai - 83, Ph : 24749439, 9500074947
kannmarconsultants@gmail.com

	Ast	=	1372	mm^2		=	686	mm^2
Provide		3	20			3	20	
		2	20			0	20	
		0	16			0	16	
"A_{st}" Provided		1570.60	>	1371.84	mm^2	942.36	>	685.92
		1.24	**Safe**			**0.74**	**Safe**	

Rebar @ Support

		P_t	P_c		
Refer SP 16 ,Page 86,Pt	=	1.356	0.678		**1.356** %

	A_{st}	=	1.356	230	550			
				100				
	Ast	=	1716	mm^2		=	858	mm^2
Provide		3	20			3	32	
		3	20			0	20	
		0	16			0	16	
"A_{st}" Provided		1884.72	>	1715.67	mm^2	2412.442	>	857.83
		1.49	**Safe**			**1.91**	**Safe**	

Min.Reinf = 0.87 x b x d / F_{yl} mm^2

=	0.870	230	550
		415	

Min.Reinf = 265.193 mm^2

"A_{st}" Provided 1570.6 > 265.193 mm^2

Safe

Min. % of steel required

As per Cl.26.5.1.1 IS456:2000 = 0.205 %

As per Cl.6.2.1 IS13920:1993 = 0.290 % (0.24 √ fck) /fy)

$p_{t\,min}$ = **0.290** % < 1.49 %

Safe

Max. % of steel to be used =

As per Cl.26.5.1.1 IS456:2000 = 4.000 %

As per Cl.6.2.1 IS13920:1993 = 2.500 %

$p_{t\,max}$ = **2.500** % > 1.49 %

Safe

CHECK FOR SHEAR STRENGTH

As per clause 40.2 (P73) of IS 456-2000

Tc Max = 0.62 *sqrt(Fck)

= 0.62	5

= 3.10 N/mm^2

Percentage of steel P_t = **1.24** %

Permissible shear stress in concrete (kt_c) for solid slabs in limit state design method

Ref IS 456:2000 Cl 40.2.1.1, Table 19

f_{ck} N/mm^2	p_t %	D of slab	k	k t_c N/mm^2
25	1.24	600	1.00	0.69

Now kT_c = 0.69 N/mm^2 < 3.10 N/mm^2

Nominal Shear stress T_v = V_u/b.d **Safe**

V_u = 1.5 X 126.30

189.454

T_v = V_u/b.d

= 189.45	1000
230.00	550

= 1.50 < 3.10 N/mm^2

Safe

1.50 > 0.69 N/mm^2

T_v > kT_c

Provide shear Bar

S. Subramaniam, M.S.(Struc)., PDQS, DRTM.
Registered Structural Engineer Grade-I.
(SE / GR-I / 2024 / 02 / 008).
New No: 14, Old No. 17A, Kan
Ganga Nagar, Jafferkhanpet, Ashok Nagar,
Chennai - 83, Ph : 24749439, 9500074947
kannimarconsultants@gmail.com

Total shear strength	V_u	=	189453.97 N			
Shear contribution by concrete	$T_c b.d$	=	0.69	230	550	
			87285			
Shear contribution by stps	V_{us}	=	V_u	-	T_c b.d	
			189453.97	-	87285	
			102168.97 N			
Minimum shear resistance	0.4bd	=	50600.00 N			
		=	102168.97 N			
Provide	Y 8		195 mm C/C			
Area or 2 legged stps	a	=	101 mm^2			
Spacing of stirrups		=	$\frac{0.87 * Fy * a * d}{V_{us}}$			
		=	0.87	415	101	550
				102168.97		
		=	**195** mm C/C			
Provide shear Rebar without considering conc. shear	Y 8		**105** mm C/C			
	a	=	101 mm^2			
		=	$\frac{0.87 * Fy * a * d}{V_u}$			
		=	0.87	415	101	550
				189453.97		
		=	**105 mm C/C**			
Minimum Stirrups Reinforcement	Y 8					
	A_{sv}	=	100.52 mm^2			
	S_v	=	0.87*Fy*Asv/0.4*b			
			0.87	415	101	
			0.4	230.00		
			$\frac{36292.16832}{92}$			
		=	**394**	**mm**	**C/C**	
Maximum Spacing of Stirrups		=	0.75 *d			
		=	412.5 mm			
		=	300 mm			
Least of above			300 mm			
				Y	8	
				@		
Provide		394	>	150	<	300
			Safe		**Safe**	

S. Subramaniam, M.S.(Struc)., PDQS, DRTM.
Registered Structural Engineer Grade-I.
(SE / GR-I / 2024 / 02 / 008).
New No: 14, Old No. 17A, Kan
Ganga Nagar, Jafferkhanpet, Ashok Nagar,
Chennai - 83, Ph : 24749439, 9500074947
kannimarconsultants@gmail.com

SLAB DESIGN AS PER BIS-2000 METHOD

Location:

L_x	=	4.3	m
L_y	=	4.61	m
F_{ck}	=	25	N/mm^2
F_y	=	415	N/mm^2
L_y/L_x	=	1.07	
		TWO WAY SLAB	

Span	=	4.3	M	Span/32
Slab thickness	=	125	MM	134.4
Cover		20	MM	
Effective depth		105	MM	
Concrete wt	=	25	kN/m^3	
Live Load on Slab	=	2	kN/m^2	
Floor finish	=	1.5	kN/m^2	

Design Load:

slab weight	=	3.125	kN/m^2
Live + Floor finish Load	=	3.5	kN/m^2
Total Load	=	6.63	kN/m^2

$M_x = \alpha_x w l^2_x$

$M_y = \alpha_y w l^2_x$

As per IS456-2000-Table 26-Page No:91

Negative Moment at edge

L_y/L_x = **1.07**

α_x = 0.047

		Ly/Lx		For
		1	**1.1**	1.07
Negative Moment at edge	α_x	*0.047*	*0.053*	0.051
Positive Moment at mid span	α_x	*0.035*	*0.040*	0.039

				M_{ux}	M_{uy}
M_x	=	6.29	kNM	9430786.875	
M_y	=	5.76	kNM		8635985.6
Maximum Bm	=	**6.29**	kNM		
"d" - reqd under compression	=	52.28	mm		

		M_{ux}	M_{uy}	
$M_u/b.d^2$	=	**0.86**	**0.78**	N/mm^2

As per SP16, Table 2,Page 48.

P_t	=	%	**0.247**	**0.226**
Area of steel	=	mm^2	259.54	236.78

Adopt

Y	10	140	mm C/C	10	140	mm C/C	
560.93	>	SAFE	259.54	560.93	>	SAFE	236.78

Positive Moment at mid span

α_x = 0.037

				M_{ux}	M_{uy}
M_x	=	4.73	kNM	7093387.5	
M_y	=	4.53	kNM		6798541.9
Maximum Bm	=	**4.729**	kNM		

		M_{ux}	M_{uy}	
$M_u/b.d^2$	=	**0.64**	**0.62**	N/mm^2

As per SP16, Table 2,Page 48.

P_t	=	%	**0.184**	**0.176**
Area of steel	=	mm^2	193.10	184.82

Adopt

Y	10	140	mm C/C	10	140	mm C/C	
560.93	>	SAFE	193.10	560.93	>	SAFE	184.8

S. Subramaniam, M.S.(Struc)., PDQS, DRTM.
Registered Structural Engineer Grade-I.
(SE / GR-I / 2024 / 02 / 008).
New No: 14, Old No. 17A, Kan
Ganga Nagar, Jafferkhanpet, Ashok Nagar,
Chennai - 83, Ph : 24749439, 9500074947
kannmarconsultants@gmail.com

Check for Shear strength

As per clause 40.2 (P72) of IS 456-2000

	Tc Max	=	0.62 *sqrt(Fck)	
		=	0.62	5
		=	3.10 N/mm²	
For slab as per 40.2.3.1	T_c Max	=	0.5*$T_c$max	
		=	0.50	3.10
	T_c Max	=	1.55 N/mm	
Percentage of steel	P_t	=	**0.53**	**%**
Shear strength		=	k t_c	

Permissible shear stress in concrete (kt_c) for solid slabs in limit state design method

Ref IS 456:2000 Cl 40.2.1.1, Table 19

f_{ck} N/mm²	P_t %	D of slab	k	k t_c N/mm²
25	0.53	125	1.30	0.65

Now kTc	k t_c	=	0.65	<	1.55 N/mm
				Safe	
Nominal Shear stress	T_v	=	V_u/b.d		
	V_u	=	21.36563 kN		
	T_v	=	0.20	<	1.55 N/mm²
				Safe	
	T_v	<	kT		
		SAFE			

Check for Defflection

Live Load 2 < 3.01 kN/m²

Defflection calculation is Not Necessary

A_{st} required		=	259.54 mm	
A_{st} Provided		=	560.93 mm	
Steel stress for service Load	F_s	=	0.58 x F_y X	A_{st} required / A_{st} Provided
As per Fig-4.IS 456-2000.Page38		=	0.58	415 / 560.93 = 193.09847
	F_s	=	**82.86** N/mm²	
Percentage of steel provided		=	**0.53** %	

Modification factor Fig-4 As per IS 456-2000 Page 38

f_y	f_s	$P_{t\,req.}$	$P_{t\,prov.}$	MF_t
N/mm	N/mm	%	%	IS 456 Fig 4
415	82.86	0.18	0.53	2.00

	mf
0.12	2
0.4	2
0.360	2.000 N/mm²

Effective depth ratio

For Simply supported	=	20	
Continues	=	26	
Cantilever	=	7	
(Lx/d) Max	=	26	x 2.000
	=	52.0000	
(Lx/d)Provided	=	4300 / 105	
	=	40.952	
(Lx/d) Max	52 >	40.95 (Lx/d)Provided	
	SAFE		

steel stress	mf
145	2
190	1.7
158.000	1.913 N/mm²

Maximum diameter of bars for slabs

Ref IS 456-2000 Cl 26.5.2.2

D of slab mm	dia of bar mm	Result Cl 26.5.2.2
125	10	Ok

S. Subramaniam, M.S.(Struc)., PDQS, DRTM.
Registered Structural Engineer Grade-I.
(SE / GR-I / 2024 / 02 / 008).
New No: 14, Old No. 17A, Kan
Ganga Nagar, Jafferkhanpet, Ashok Nagar,
Chennai - 83, Ph : 24749439, 9500074947
kannimarconsultants@gmail.com

Kannimar Consultants,
Chennai
24749439

STAIRECASE -DOG LEGGED MODEL

Location:

L_1	=	6.32	m		
F_{ck}	=	25	N/mm^2		
F_y	=	415	N/mm^2		
Step weight		20	kN/m^3		
Landing width	=	1.5			
Slope length	=	3.32			
Step tread	=	0.25	m		
Step riser	=	0.165	m		
Slope length for one step	=	0.300	m		
Number of tread	=	3.32 / 0.25			
	=	13.28	No		
Say	=	10	No		
Aditional slope length per flight	=	10		x	0.050
	=	0.50			
Effective length	=	6.82	m		
Concrete wt	=	25	kN/m^3		
Waist slab thickness	=	0.140	m		(Assumed)

Loads:

Dead load of Waist slab	=	3.5	kN/m^2		
Ceiling finish	=	0.25	kN/m^2		
Sub total	=	3.75	kN/m^2		
Dead Load on plan area	=	3.75 / 0.25		x	0.300
	=	4.49	kN/m^2		
Brick load	=	0.165 / 2		x	20
		1.65	kN/m^2		
Live load	=	3	kN/m^2		
Floor finish	=	1.5	kN/m^2		
Total load on staire	=	10.64	kN/m^2		
Maximum BM($w \times l^2/12$)	=	10.64 / 12		x	6.82^2
	=	41.20	kN.M		
M_u	=	1.5 x		41197615	
		61796423.14	Nmm		

61796423.14		
0.138	25	1000

17912.01

sqrt	=	133.84	mm
Cover	=	20.00	mm
Total	=	153.84	mm
Provide	=	140.00	mm
d		117.00	

$M_u/b.d^2$

61796423.14		
1000.00	117.00	117.00

4.51

As per SP16, Table 2,Page 48,

P_t	=	**1.772**	%				
Area of steel	=	1.772464985	x	1000	x	117.00	

S. Subramaniam, M.S.(Struc)., PDQS, DRTM.
Registered Structural Engineer Grade-I.
(SE / GR-I / 2024 / 02 / 008).
New No: 14, Old No. 17A, Kan
Ganga Nagar, Jafferkhanpet, Ashok Nagar,
Chennai - 83, Ph : 24749439, 9500074947
kannimarconsultants@gmail.com

Kannimar Consultants,
Chennai
24749439

100

= 2073.78 mm^2

Adopt

Y 16 90 **mm C/C**

2233.74 > 2073.78 mm^2

Safe

Distributer:

Provide minimum steel = 0.12%

0.12	1000	117.00
	100	

= **140.4** mm^2

Adopt

Y 10 150 **mm C/C**

523.53 > 140.4 mm^2

Safe

Check for Shear strength

As per clause 40.2 (P72)
of IS 456-2000

Percentage of steel P_t = $\frac{2233.74 \times 100}{1000 \times 117.00}$

P_t = **1.91** %

Shear strength = kT_c

k = 1.2

IS456-2000,Page73,table19

% of steel	T_c
1	0.64
1.25	0.7

For **1.91** 0.858 N/mm^2

kT_c = 1.200 x 0.858

1.030

Nominal Shear stress T_v = $V_u/b.d$

V_u

1.5	6.82	10.64
	2	

V_u = 54.4029 kN

T_v $\frac{54.4029 \times 1000}{1000 \times 117.00}$

T_v = 0.4650 < 1.0298

T_v < kT_c

SAFE

SUMMARY

Waist slab thick = **140.00 mm**

Main Rebar = **Y 16 @ 90 mm C/C**

Distributer = Y 10 @ 150 **mm C/C**

S. Subramaniam, M.S.(Struc)., PDQS, DRTM.
Registered Structural Engineer Grade-I.
(SE / GR-I / 2024 / 02 / 008).
New No: 14, Old No. 17A, Kan
Ganga Nagar, Jafferkhanpet, Ashok Nagar,
Chennai - 83, Ph : 24749439, 9500074947
kannimarconsultants@gmail.com

Kannimar Consultants
Chennai
24749439

SUNSHADE DESIGN

1	Grade of concrete	F_{ck}	=	**25**	N/mm^2	
2	grade of steel	Fy	=	**415**	N/mm^2	
3	Width of sunshade		=	**0.6**	m	
4	Sunshade thickness -	t_{max}	=	0.075	m	**75** mm
		t_{min}	=	0.1	m	**100** mm
		average	=	0.0875		87.5
		cover	=	0.014		**15**
		effective depth d	=	0.061	m	61 mm
5	Self weight of sunshade		=	2.19	kN/m^2	
	Finishes		=	1	kN/m^2	
	Live load		=	0.75	kN/m^2	
			Total	3.94	kN/m^2	
6	Maximum BM	$W L^2/2$	=	0.71	kN.M	
		"d" req	=	16.02	<	61 mm
					SAFE	
7	M_U/bd^2		=	**0.29**	N/mm^2	
		P_t	=	**0.085**		
	Area of steel		=	51.85	mm^2	
	Adopt					
		Y 10		**140**	**mm C/C**	
		560.93	>	51.85	mm^2	
			Safe			

S. Subramaniam, M.S.(Struc)., PDQS, DRTM.
Registered Structural Engineer Grade-I.
(SE / GR-I / 19 / 02 / 008).
New No: 14, Old No. 17A, Kannimar Villa,
Ganga Nagar, Jafferkhanpet, Ashok Nagar,
Chennai - 83, Ph : 24749439, 9500074947
kannimarconsultants@gmail.com

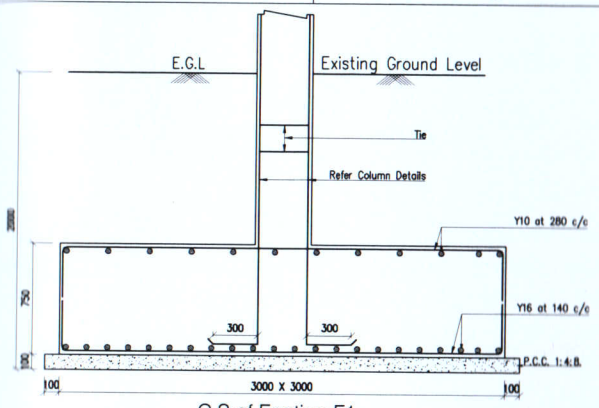

C.S of Footing F1
Size 3000 x 3000

Column Schedule		
Legend	Column	Tie Arrangement
C1 300 x 600	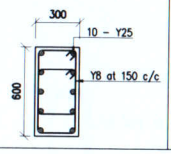	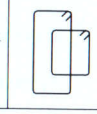

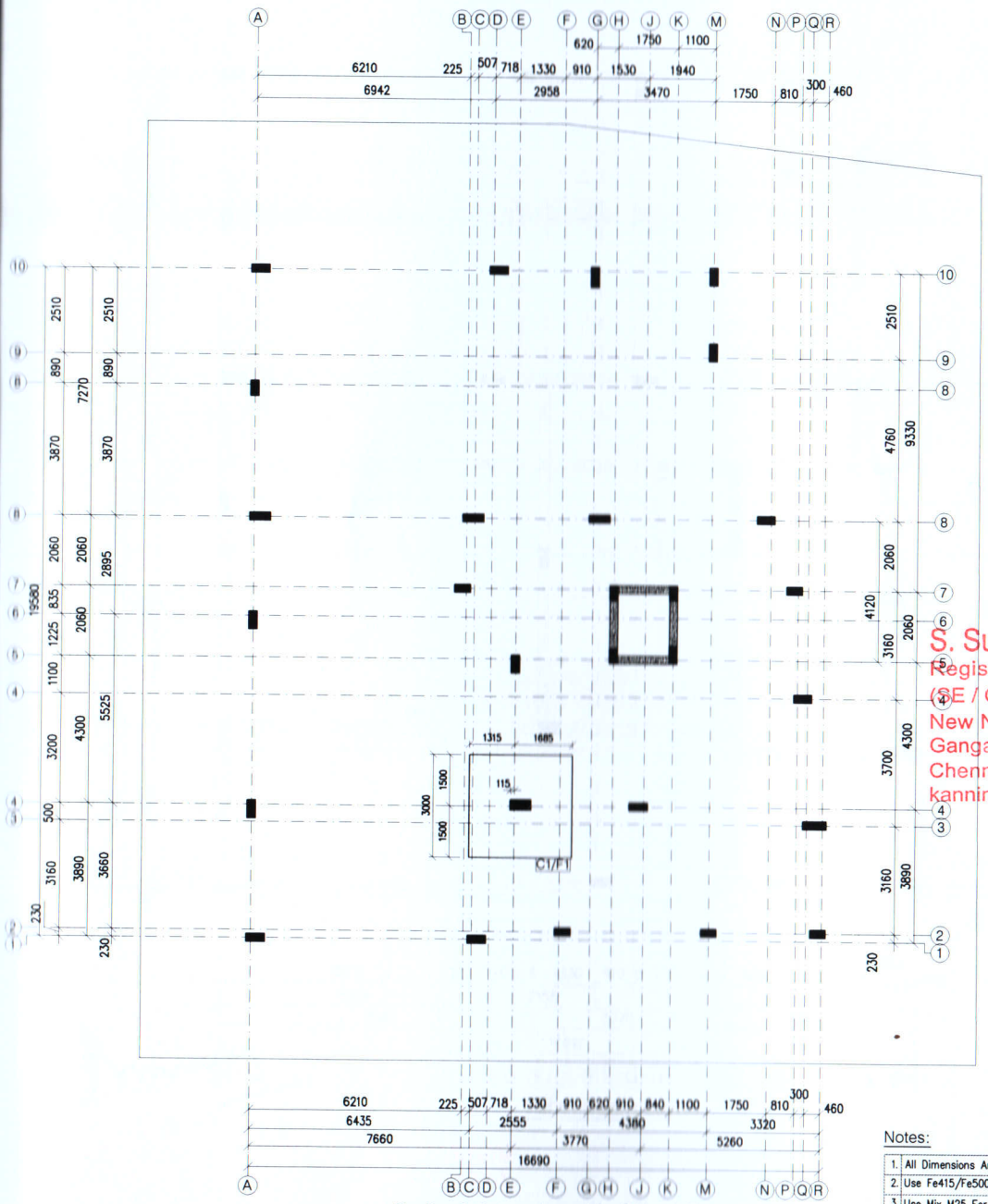

Footing & Column Layout for Stilt + 5 Floors

PLAN SHOWING THE PROPOSED CONSTRUCTION OF A RESIDENTIAL BUILDING (STILT + 5 FLOORS WITH 12 DWELLING UNITS) AT PLOT NO: 7 & 8 , 8 TH STREET , NANGANALLUR , CHENNAI - 600 061.
COMPRISED IN OLD SURVEY NO: 93 / 7 PART , TOWN SURVEY NO: 53 & 54 , BLOCK NO: 14 , WARD E OF ADAMBAKKAM VILLAGE WITH IN GREATER CHENNAI CORPORATION LIMIT

Notes:

1. All Dimensions Are In MM.
2. Use Fe415/Fe500 Grade Steel.
3. Use Mix M25 For all Works
4. Clear Cover To The Reinforcement For Footing: 50mm
   Column: 40mm,Beam: 30mm,Slab: 20mm,Rcc Wall: 20mm.

S. Subramaniam, M.S.(Struc)., PDQS, DRTM.
Registered Structural Engineer Grade-I.
(SE / GR-I / 19 / 02 / 008).
New No: 14, Old No. 17A, Kannimar Villa,
Ganga Nagar, Jafferkhanpet, Ashok Nagar,
Chennai - 83, Ph : 24749439, 9500074947
kannimarconsultants@gmail.com

Kannimar Consultants
Engineering Project Consultants
Structural Design
New No : 14,Old No . 17A, Kannimar Villa,
Ganga Nagar,Jafferkhanpet,Ashok Nagar,
Chennai- 83.Ph: 24749439/89 , 95000-74947
kannimarconsultants@gmail.com

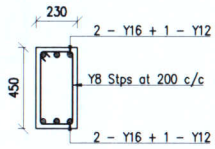

C.S of Beam PB1

Size 230 x 450

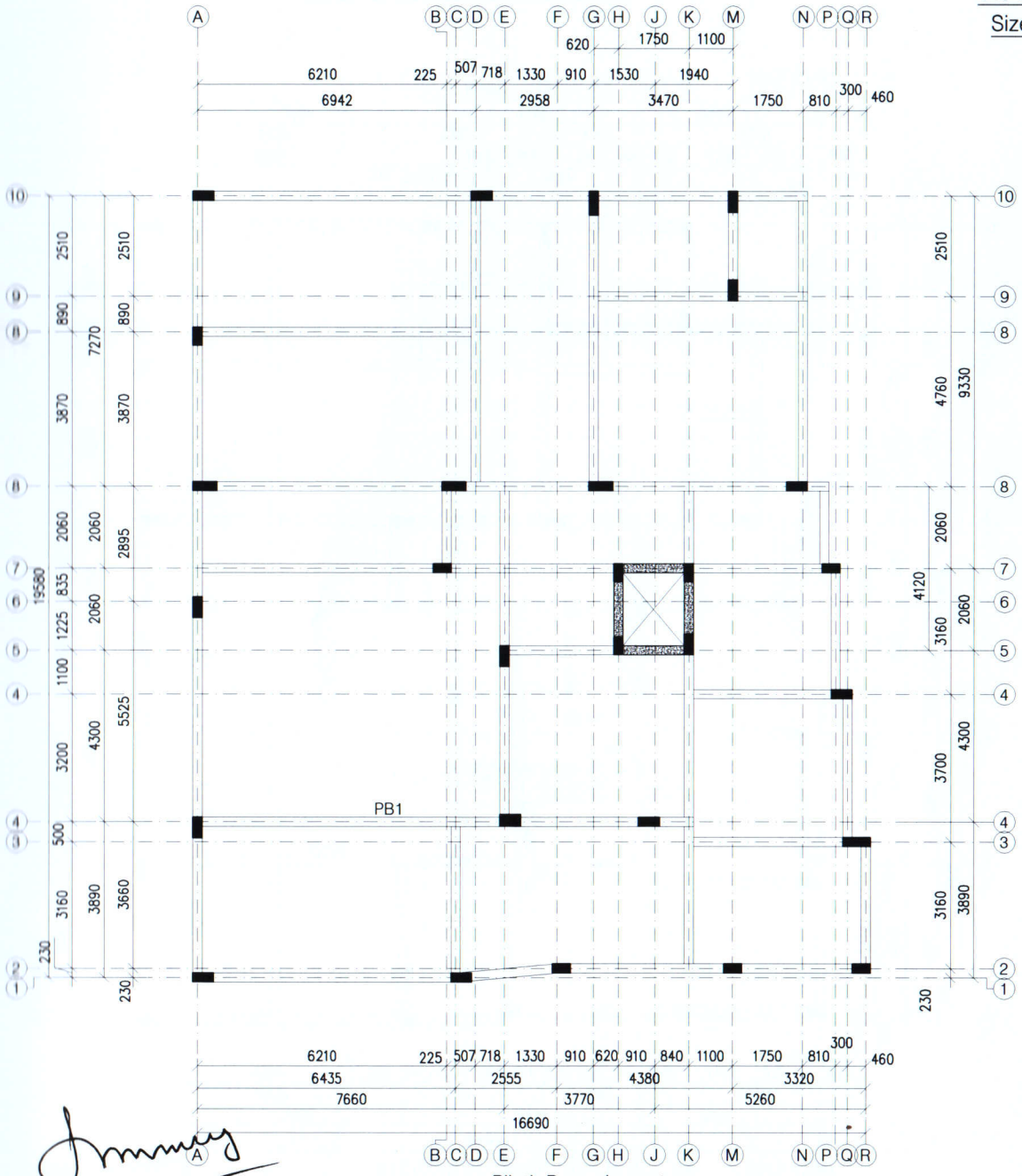

Plinth Beam Layout

S. Subramaniam, M.S.(Struc)., PDQS, DRTM.
Registered Structural Engineer Grade-I.
(SE / GR-I / 19 / 02 / 008).
New No: 14, Old No. 17A, Kannimar Villa,
Ganga Nagar, Jafferkhanpet, Ashok Nagar,
Chennai - 83, Ph : 24749439, 9500074947
kannimarconsultants@gmail.com

PLAN SHOWING THE PROPOSED CONSTRUCTION OF A RESIDENTIAL BUILDING (STILT + 5 FLOORS WITH 12 DWELLING UNITS) AT PLOT NO: 7 & 8 , 8 TH STREET , NANGANALLUR , CHENNAI - 600 061. COMPRISED IN OLD SURVEY NO: 93 / 7 PART , TOWN SURVEY NO: 53 & 54 , BLOCK NO: 14 , WARD E OF ADAMBAKKAM VILLAGE WITH IN GREATER CHENNAI CORPORATION LIMIT

Notes:

1. All Dimensions Are In MM.
2. Use Fe415/Fe500 Grade Steel.
3. Use Mix M25 For all Works
4. Clear Cover To The Reinforcement For Footing: 50mm
   Column: 40mm, Beam: 30mm, Slab: 20mm, Rcc Wall: 20mm.

Kannimar Consultants
Engineering Project Consultants
Structural Design
New No : 14, Old No . 17A, Kannimar Villa,
Ganga Nagar, Jafferkhanpet, Ashok Nagar,
Chennai- 83. Ph: 24749439/89 , 95000-74947
kannimarconsultants@gmail.com

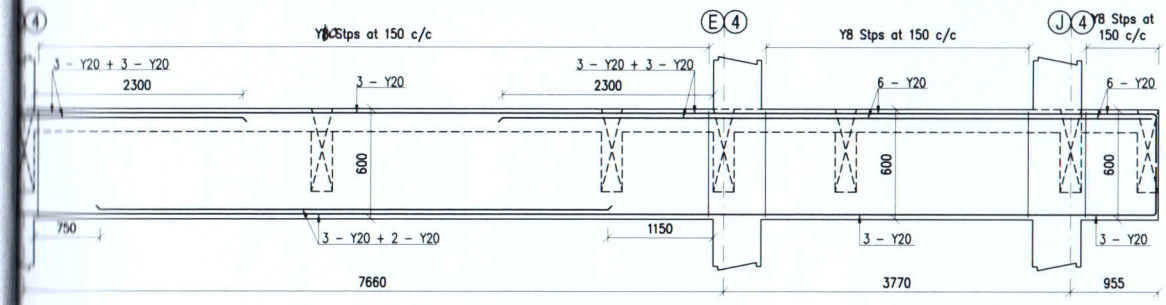

L.S. of Beam B101 Size 230 x 600

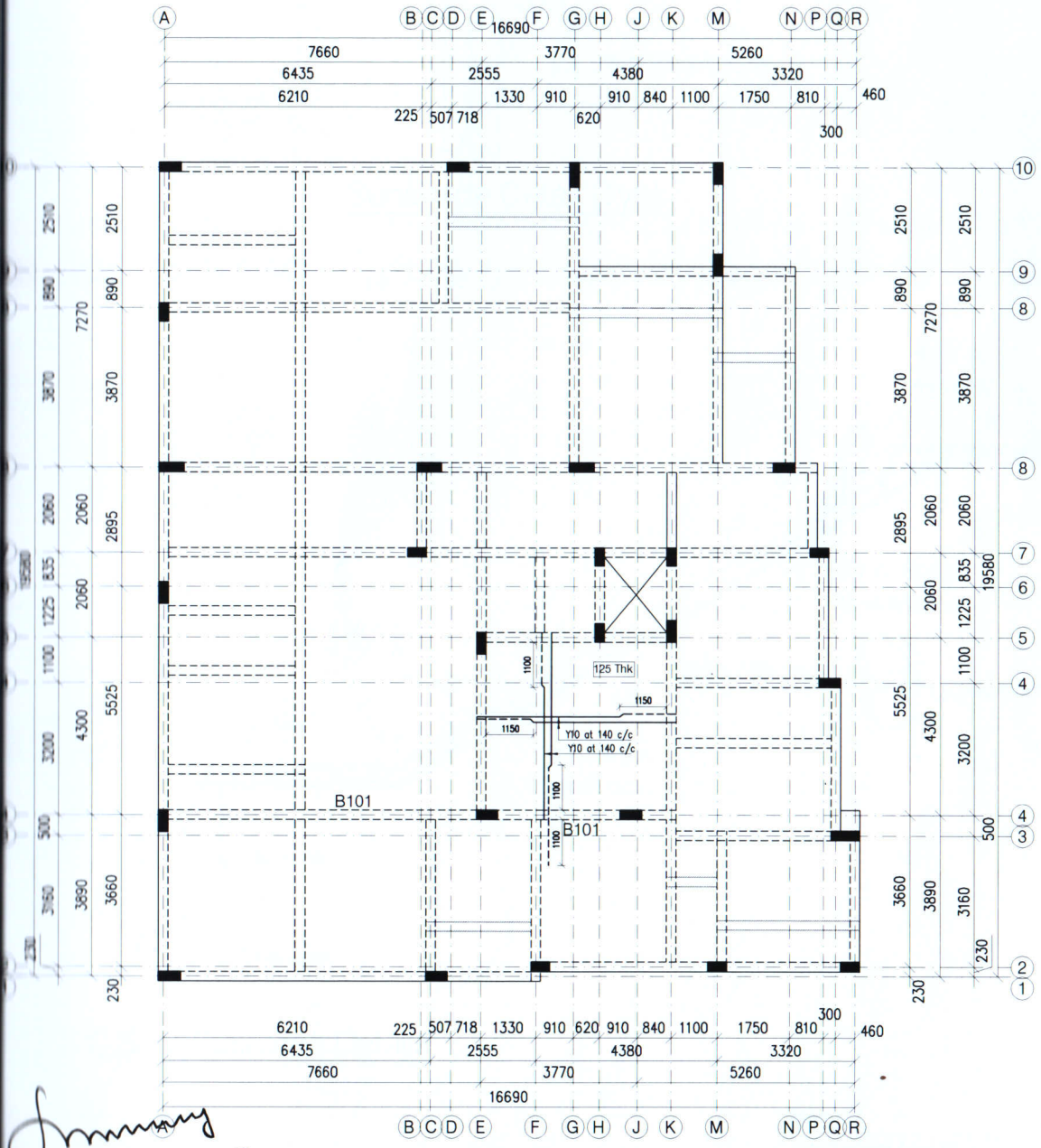

Roof Beam & Slab Layout

Notes:

1. All Dimensions Are In MM.
2. Use Fe415/Fe500 Grade Steel.
3. Use Mix M25 For all Works
4. Clear Cover To The Reinforcement For Footing: 50mm
   Column: 40mm, Beam: 30mm, Slab: 20mm, Rcc Wall: 20mm.

PLAN SHOWING THE PROPOSED CONSTRUCTION OF A RESIDENTIAL BUILDING (STILT + 5 FLOORS WITH 12 DWELLING UNITS) AT PLOT NO: 7 & 8 , 8 TH STREET , NANGANALLUR , CHENNAI - 600 061.
COMPRISED IN OLD SURVEY NO: 93 / 7 PART , TOWN SURVEY NO: 53 & 54 , BLOCK NO: 14 , WARD E OF ADAMBAKKAM VILLAGE WITH IN GREATER CHENNAI CORPORATION LIMIT

S. Subramaniam, M.S.(Struc)., PDQS, DRTM.
Registered Structural Engineer Grade-I.
(SE / GR-I / 19 / 02 / 008).
New No: 14, Old No. 17A, Kannimar Villa,
Ganga Nagar, Jafferkhanpet, Ashok Nagar,
Chennai - 83, Ph : 24749439, 9500074947
kannimarconsultants@gmail.com

Kannimar Consultants
Engineering Project Consultants
Structural Design
New No : 14,Old No . 17A, Kannimar Villa,
Ganga Nagar,Jafferkhanpet,Ashok Nagar,
Chennai- 83,Ph: 24749439/89 , 95000-74947
kannimarconsultants@gmail.com

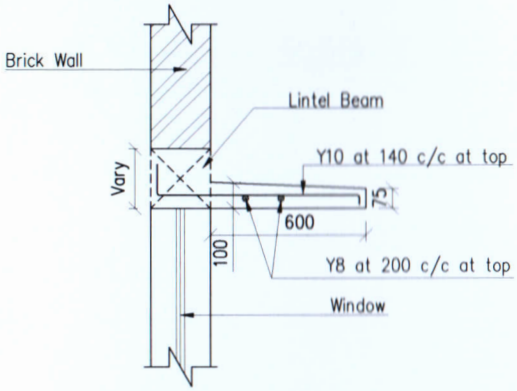

Sunshade Detail (Typ)

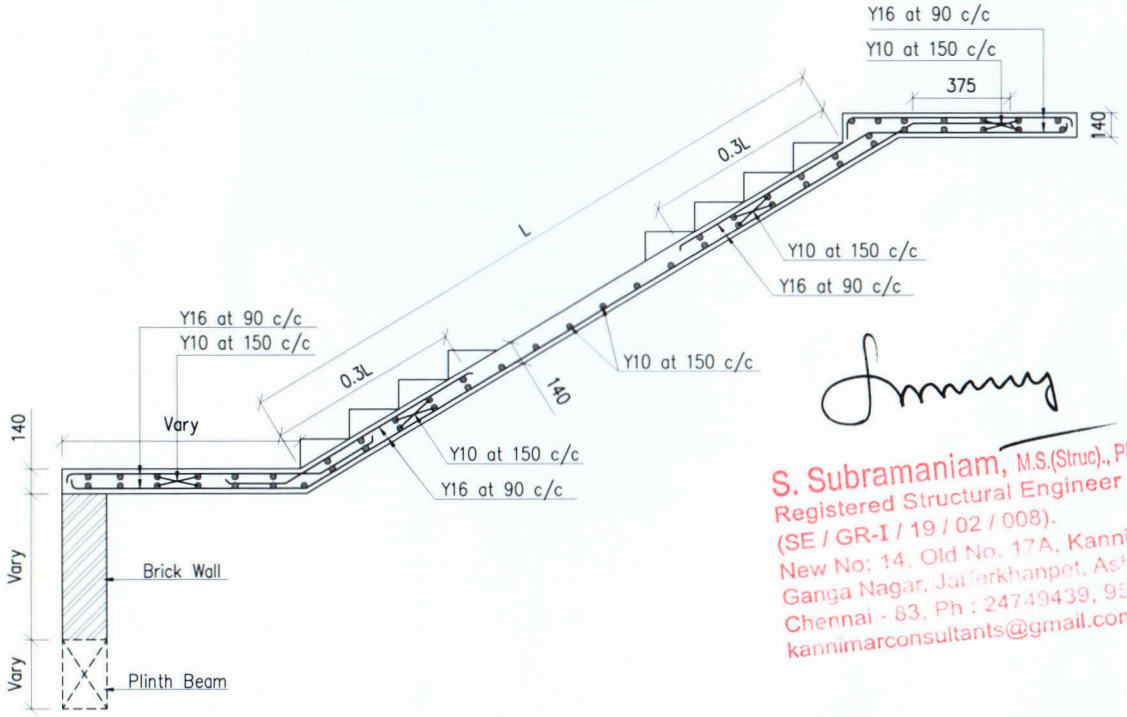

S. Subramaniam, M.S.(Struc)., PDQS, DRTM.
Registered Structural Engineer Grade-I.
(SE / GR-I / 19 / 02 / 008).
New No: 14, Old No. 17A, Kannimar Villa,
Ganga Nagar, Jafferkhanpet, Ashok Nagar,
Chennai - 83, Ph : 24749439, 9500074947
kannimarconsultants@gmail.com

C.S. of Staircase Details

Notes:

1.	All Dimensions Are In MM.
2.	Use Fe415/Fe500 Grade Steel.
3.	Use Mix M25 For all Works
4.	Clear Cover To The Reinforcement For Footing: 50mm Column: 40mm,Beam: 30mm,Slab: 20mm,Rcc Wall: 20mm.

PLAN SHOWING THE PROPOSED CONSTRUCTION OF A RESIDENTIAL BUILDING (STILT + 5 FLOORS WITH 12 DWELLING UNITS) AT PLOT NO: 7 & 8 , 8 TH STREET , NANGANALLUR , CHENNAI - 600 061.
COMPRISED IN OLD SURVEY NO: 93 / 7 PART , TOWN SURVEY NO: 53 & 54 , BLOCK NO: 14 , WARD E OF ADAMBAKKAM VILLAGE WITH IN GREATER CHENNAI CORPORATION LIMIT

Kannimar Consultants
Engineering Project Consultants
Structural Design
New No : 14,Old No . 17A, Kannimar Villa,
Ganga Nagar,Jafferkhanpet,Ashok Nagar,
Chennai- 83.Ph: 24749439/89 , 95000-74947
kannimarconsultants@gmail.com