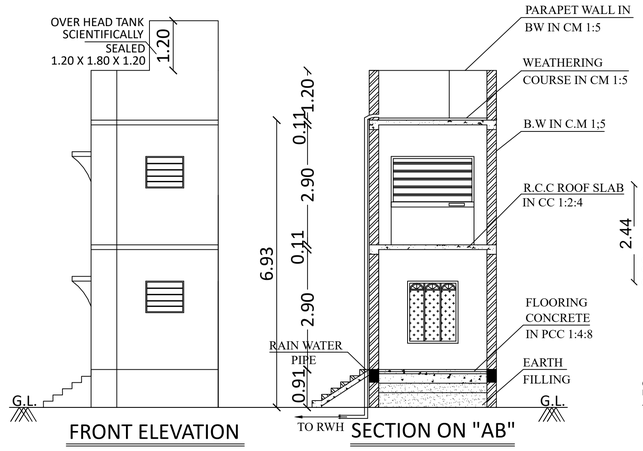

FRONT ELEVATION

SECTION ON "AB"

LAYOUT APPROVED VIDE IN

D.T.C.P NO: 1494/1989

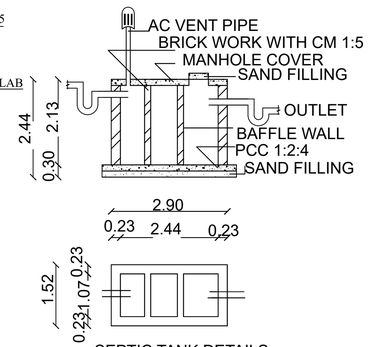

SEPTIC TANK DETAILS

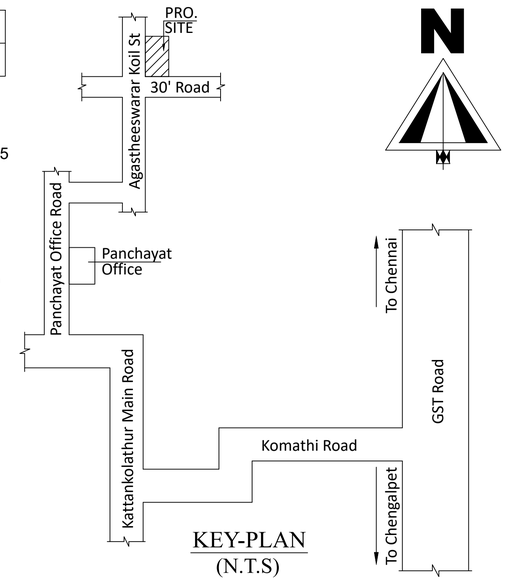

KEY-PLAN
(N.T.S)

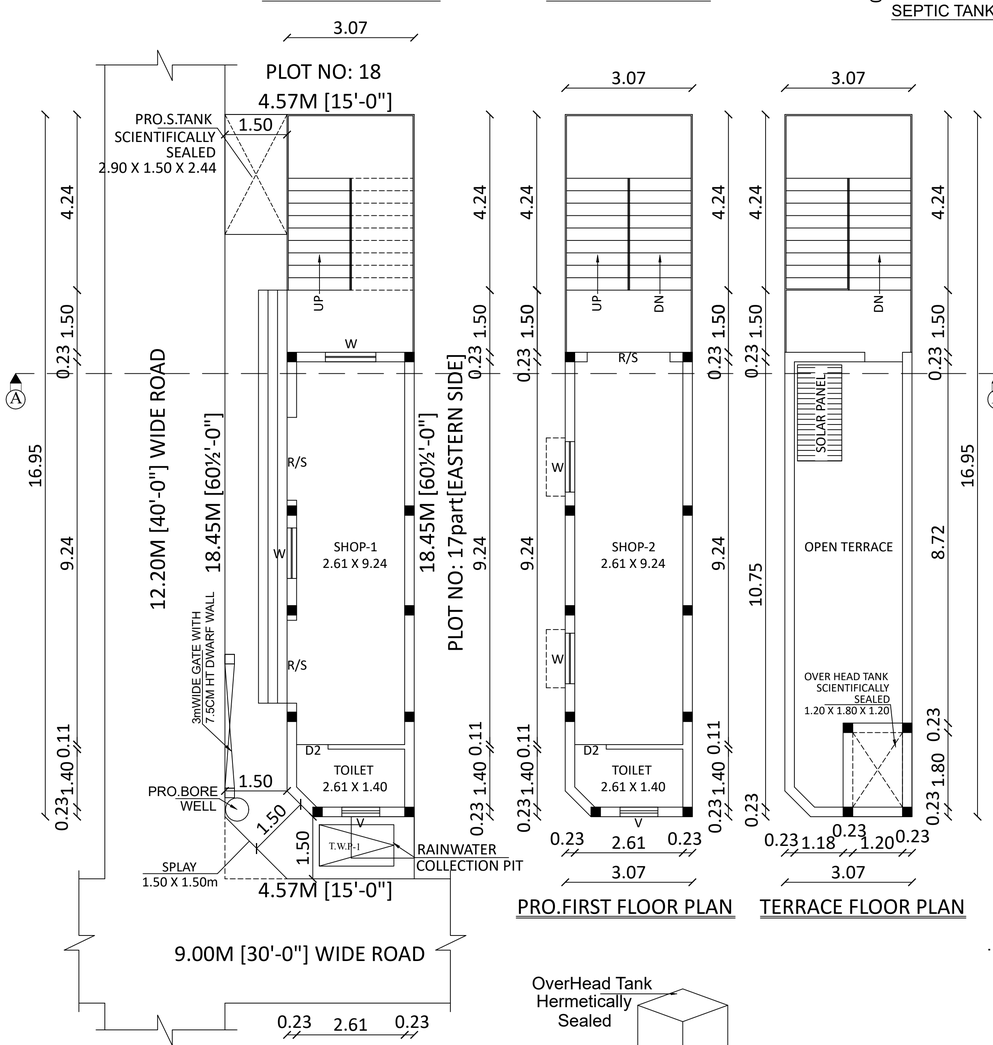

SITE CUM PRO.GROUND FLOOR PLAN

PRO.FIRST FLOOR PLAN

TERRACE FLOOR PLAN

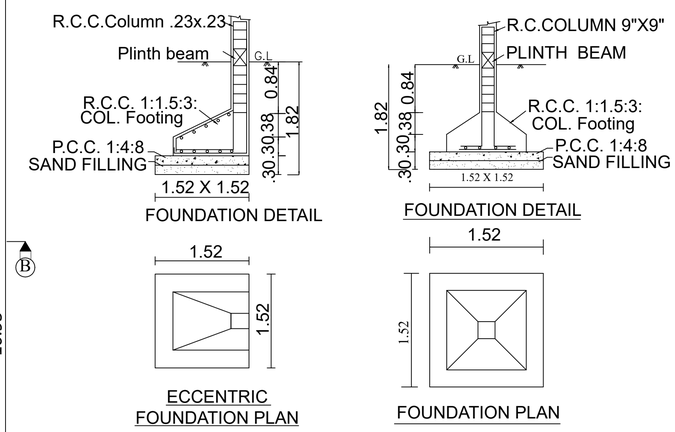

FOUNDATION DETAIL

FOUNDATION DETAIL

ECCENTRIC FOUNDATION PLAN

FOUNDATION PLAN

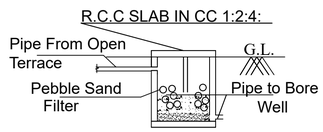

RAIN WATER HARVESTING DETAIL

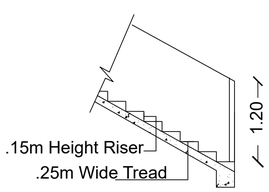

STAIRCASE DETAILS

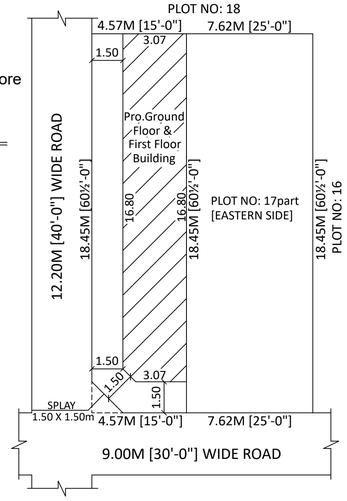

SITE CUM RESIDIAL PLOT DETAIL

SCALE 1:200

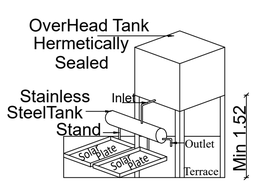

SOLAR WATER HEATING SYSTEM

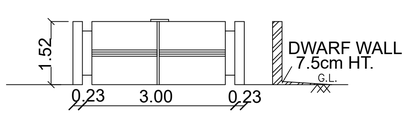

GATE PLAN & ELEVATION

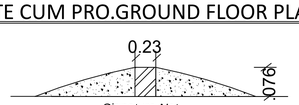

DWARF WALL DETAIL

Signature Not Verified

Signed by Thangaraj Panchayat Thanaiyur
Location:Kancheepuram
Date:2024.11.26 12:24:00

PLAN SHOWING THE PROPOSED CONSTRUCTION OF A COMMERCIAL BUILDING AT PLOT NO:17part [WESTERN SIDE], IN OLD SURVEY NO:16/2, NEW SURVEY NO:16/3B AS PER PATTA NO:4659, PERUVAZHI NAGAR, KAVANUR VILLAGE, KUNDRATHUR TALUK, KANCHEEPURAM DISTRICT, KAVANUR VILLAGE PANCHAYAT & KUNDRATHUR PANCHAYAT UNION LIMIT.

OWNER NAME: Mrs.N.BHAGYA LAKSHMI

SCALE: 1'0"=8'0" [1:100]

JOINERY DETAILS

TYPE	METRIC WIDTH	METRIC HEIGHT	DESCRIPTION
R/S	2.50	2.13	ROLLING SHUTTER
W	1.30	1.45	T.W FRAMED PANELLED OPENABLE WINDOW WITH 3 EQL SHUTTERS
D2	0.76	2.13	T.W FRAMED MARINE PLY. PANELLED DOOR TO DETAIL.
V	0.91	0.76	T.W FRAMED GLAZED SPLIT TYPE VENTILATOR TO DETAIL.

AREA DETAILS	SQMT	SQFT
PLOT AREA (As per Doc.)	84.30	907.50
PLOT AREA (As per Patta)	84.00	
PRO. G.FLOOR	34.22	368.00
PRO. F.FLOOR	34.22	368.00
TOTAL	68.44	736.00

F.S.I - 0.81

COLOUR INDEX

PROPOSED
ROAD
BOUNDARY

NOTE:-

NO. OF FLOOR :- G + 1

OWNER:-

N.Bhakhi

REGISTERED ENGINEER:-

T. Arul

Ln.T.ARUL DHARAJ M.Tech.,(ST),LLB
Registered Engineer
Reg No.RE / GR-II/19/03/014
Chennai Metropolitan Development Authority
Emmanuel Planners, Ph:044 - 22291919
No.15,Sri Ranganathan Nagar,
Near Bharath Engg.College, Chennai-600 073.
Cell : 9381032266

Ref.no-20 [28.10.2024]