PLAN SHOWING THE PROPOSED CONSTRUCTION OF A INDUSTRIAL BUILDING FOR M/s RMG POLYVINYL INDIA LIMITED S.FNOs:19/10, 122/4pt, 122/5pt, 122/7pt, 122/8A, 122/9, 122/10, 122/11, 130/4Cpt, 130/4Dpt, 137/1pt, 137/2pt,138pt, 139/2pt, 140/1pt, 140/1Bpt, 140/2A1pt, 140/2A2, 140/2B1pt, 140/2B2, 140/3Apt, 140/4, 140/5, 140/6A, 140/6B, 140/7pt, 140/8,140/9A, 140/9B, AND 411/5pt IN Approved Layout of Cheyyar "SIPCOT INDUSTRIAL PARK PHASE – II" IN PLOT NO :B6/2, OF Sozhavaram VILLAGE, Vembakkam Taluk THIRUVANNAMALAI DISTRICT .

NOTES:–
ALL DIMENSIONS ARE IN METRES

SCALE:– 1:1000

PLOT AREA : 8163.156 Sq.mt

AREA DETAILS

Description	Non- FSI Area in sq.mt	FSI Area in sq.mt	Total Area in sq.mt
Factory Building	—	3494.40	3494.40
Mezzanine-I	—	537.60	537.60
Meter Room	—	60.00	60.00
Driver Rest Room	—	91.20	91.20
Work Shop	—	60.00	60.00
Toilet	—	47.20	47.20
Chiller Plant	—	87.50	87.50
Total Floor Area	—	4377.90	4377.90
Technicians & Workers Room Cum Security Block	—	24.00	24.00
Total Area	—	4401.90	4401.90
Plot Coverage	3864.30 / 80937.10 X 100 = 4.80%		
Total F.S.I	4401.90 / 80937.10 = 0.054		

PARKING DETAILS

	REQUIRED	PROVIDED
Truck Parking	13 Nos	13 Nos
Two Wheeler Parking	78 Nos	78 Nos
Car Parking	03 Nos	03 Nos

No of Workers : 100 Nos
Total H.P : 2714.00 HP

SCHEDULE OF JOINERY:–

TYPE	DESCRIPTION	SIZE IN METRE
RS	ROLLING SHUTTER	4.00 x 4.00
RS1	ROLLING SHUTTER	3.00 x 4.00
RS2	ROLLING SHUTTER	3.00 x 3.00
ED	EMERGENCY DOOR(FIRE DOOR)	1.00 x 2.10
W	WINDOW	2.10 x 1.20

SCHEDULE OF JOINERY (WORK SHOP & DRIVERS REST ROOM)

S:NO		DESCRIPTION	SIZE IN 'MM'
1	D1	DOOR (ALUMINUM)	900 x 2100
2	D2	DOOR (WPC)	750 x 2100
3	DD	DOUBLE DOOR	1500 x 2100
4	RS	ROLLING SHUTTER	3000 x 3000
5	W1	WINDOW	1200 x 1200
6	V	VENTILATOR	600 x 600

SCHEDULE OF JOINERY (BOILER SHED)

S:NO		DESCRIPTION	SIZE IN 'MM'
1	RS	ROLLING SHUTTER	5000 x 4500
2	W	WINDOW	1500 x 1200
3	–	LOUVER VENTILATOR	3000 x 1000

SCHEDULE OF JOINERY (METER ROOM)

S:NO		DESCRIPTION	SIZE IN 'MM'
1	RS1	ROLLING SHUTTER 1	3000 x 3000
2	W1	WINDOW 1	1500 x 1200
3	D	DOOR	1000 x 2100

MACHINE MOTOR LIST:–

SI.NO	MOTOR TYPE	QTY	HP USED	TOTAL HP USED
	CALENDER MACHINE			
1	BLENDER MIXER	1 NOS	60HP	60
2	INTENSIVE MIXER	1 NOS	420HP	420
3	INTENSIVE MIXER	1 NOS	420HP	420
4	MIXING MILL	1 NOS	75HP	75
		1 NOS	100HP	100
5	STRAINER EXTRUDER	1 NOS	260HP	260
6	MIXING MILL	2 NOS	75HP	150
7	4–ROLL CALENDER	4 NOS	150HP	600
		8 NOS	5HP	40
8	POST CALENDERING MACHINE	1 NOS	15HP	15
		1 NOS	20HP	20
		2 NOS	1HP	2
		1 NOS	25HP	25
		2 NOS	7.5HP	15
9	TEMPERATURE CONTROL UNITS	7 NOS	3HP	21
10	LAMINATING MACHINE			
		2 NOS	10HP	20
		2 NOS	7.5HP	15
		2 NOS	15HP	30
		1 NOS	5HP	5
11	TEMPERATURE CONTROL UNITS	10 NOS	3HP	30
12	FIRE HYDRANT SYSTEM	1 NOS	7.5HP	7.5
		1 NOS	50HP	50
13	COOLING TOWER 100 TR	2 NOS	7.5HP	15
		1 NOS	20HP	20
14	CHILLER PLANT	1 NOS	15HP	15
		4 NOS	20HP	80
15	COMPRESSOR	1 NOS	40HP	40
16	BLOWN FILM	1 NOS	40HP	40
		1 NOS	30HP	30
17	SCRAP GRINDER MACHINE	1 NOS	40HP	40
18	THERMOPAC(10KL)	1 NOS	15HP	15
		1 NOS	20HP	20
		1 NOS	7.5HP	7.5
19	WORKSHOP	2 NOS	3HP	6
		1 NOS	5HP	5
	TOTAL HP USED		2714.00HP	

SPECIFICATION:–

FOUNDATION
FOUNDATION AND BASEMENT IN RCC PEDESTAL AND PLINTH BEAM OVER A BED OF RCC 1:4:8, 6"THICK AS PER STRUCTURAL DETAILS.

SUPER STRUCTURE
SUPER STRUCTURE IN 200mm THK ,100mm THK. SOLID BLOCK WALLS WITH CEMENT MORTOR 1:5

RCC MEMBERS
FOOTING , COLUMNS, PLINTH BEAMS ,LINTEL, SUNSHADE & FLOOR WITH RCC 1:1.5:3USING 20MM NOMINAL SIZE BROCKEN STONES.

PLASTERING
WALLS INSIDE & OUTSIDE IN CM 1:5,12mm THK.

PAINTING
FINISHING THE WALL PRIMING COAT

FLOORING
FINISHING THE FLOOR WITH 150mm THK, VACCUM DEWATERING FLOORING OVER A BED OF WET MIX MACADAM

DOORS
DOORS WITH COUNTRY WOODEN FRAMES / M.S FRAMES , 32mm THK. FLUSH DOOR SHUTTERS , SS FASTENINGS , PAINT FINISH

N
W E
S

COLOUR INDEX:–
PROPOSED
ROAD
BOUNDARY

ONLINE APPLICATION NO: SWP/BPA/0011966/2023

BP/AD-DTCP(TVM)-NO: 56/2023

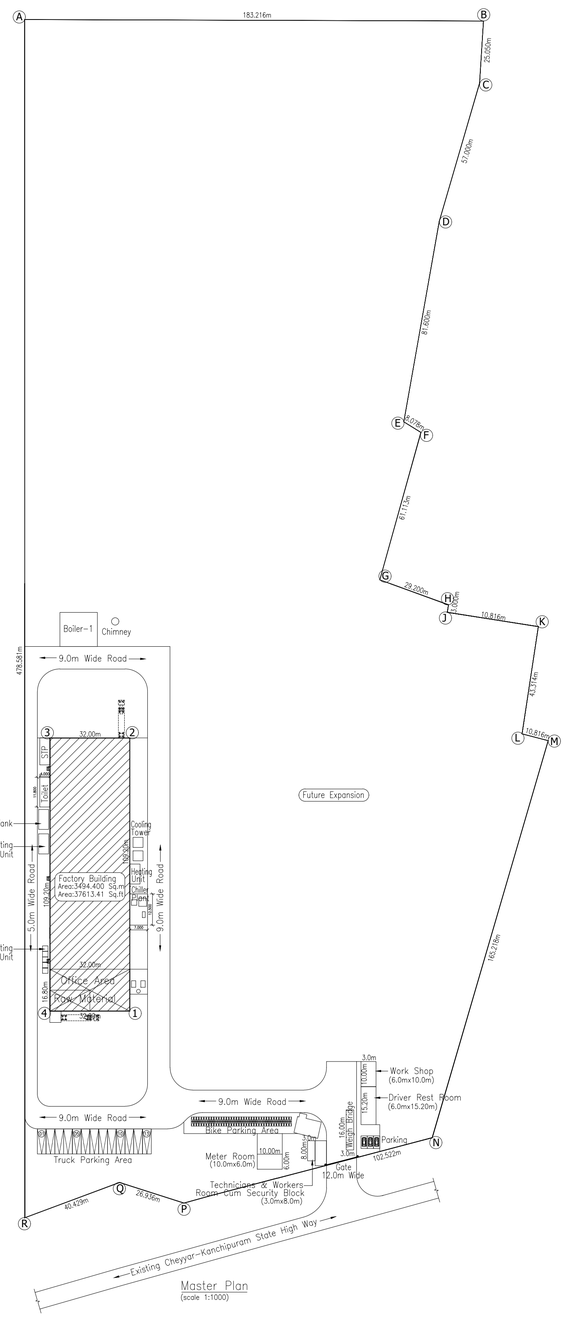

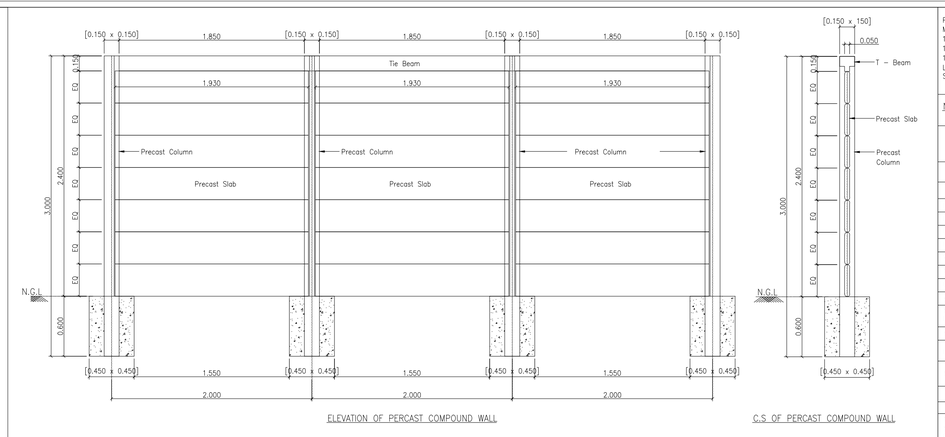

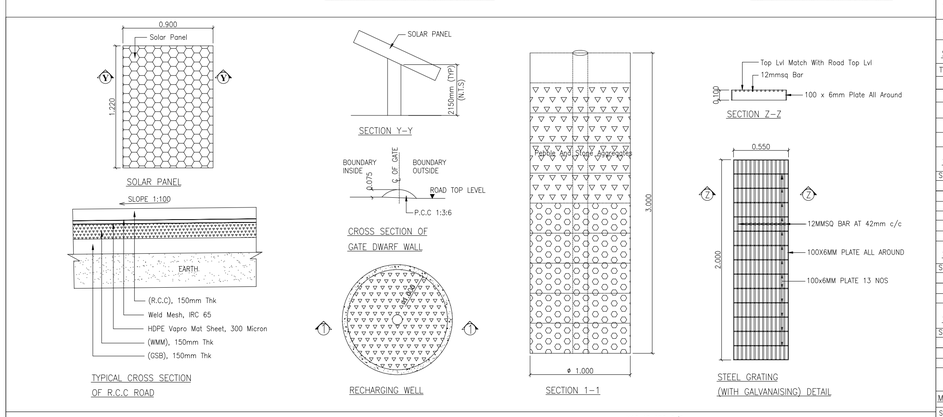

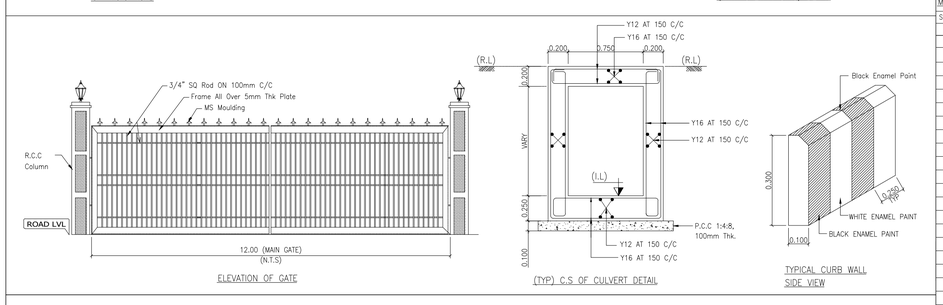

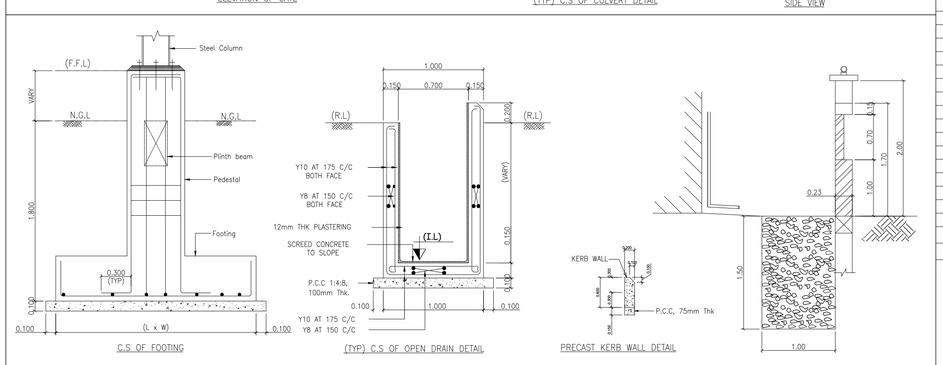

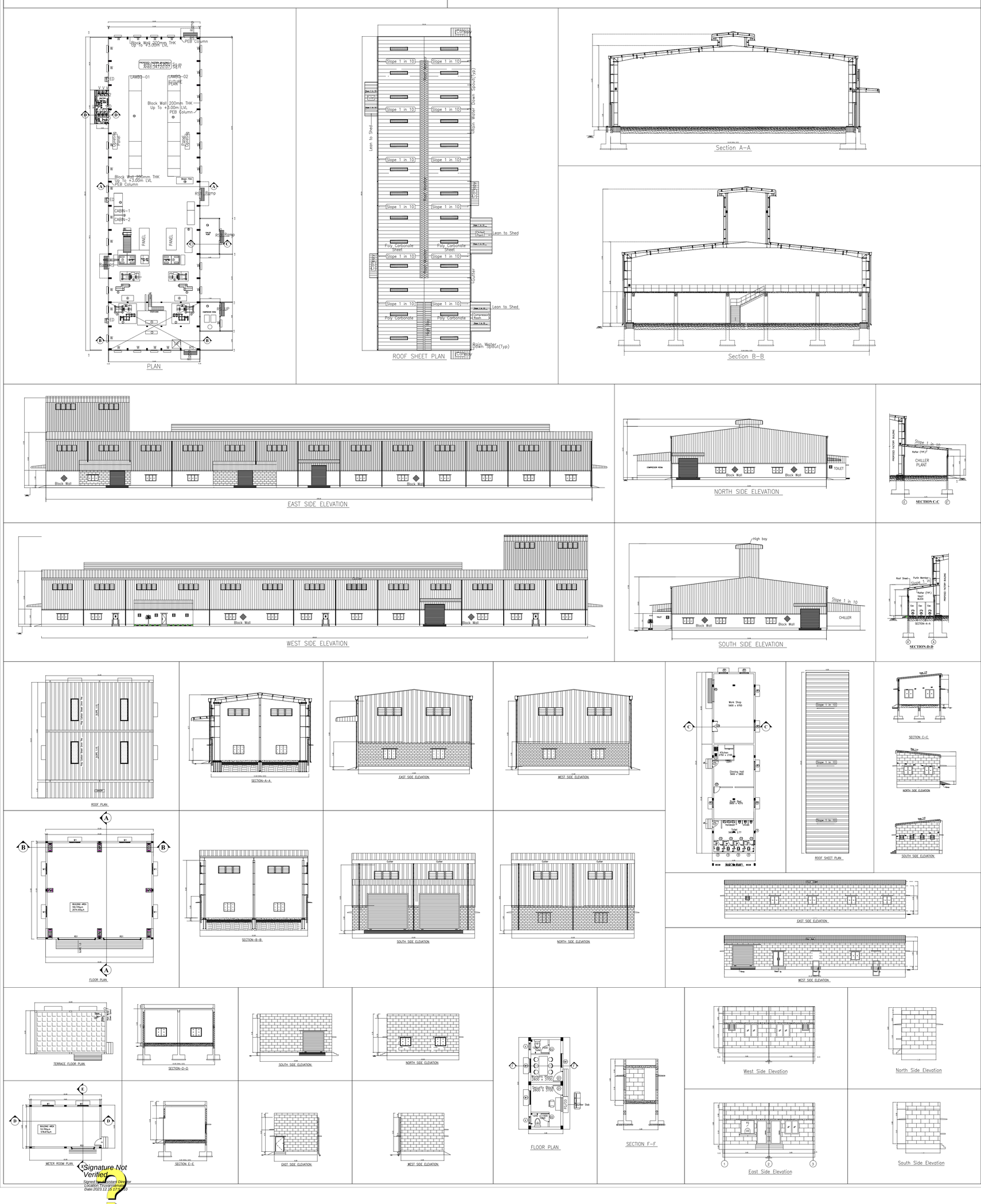

APPLICANT

RMG POLYVINYL INDIA LIMITED
Authorized Signatory

REGISTERED ENGINEER

P. SUNDHAR, BE.,
REGISTERED ENGINEER GRADE - I
TVLR / RE / GR-I / 2022 / 09 / 003
8A, Gangadeeswarar Koil Street,
Manavalanagar, Thiruvallur - 602 002.

STRUCTURAL ENGINEER

S. NAVEEN RAJ, ME.,
STRUCTURAL ENGINEER GRADE - I
TVLR / RSE / GR-I / 2022 / 09 / 011
8A, Gangadeeswarar Koil Street,
Manavalanagar, Thiruvallur - 602 002.

ARCHITECT

K. RAJENDRAN, PD,Arch,I.D
REGISTERED ARCHITECT
CA. 92 /15005
TVLR / RA / Gr-I / 2019 / 09 / 007
8A, Gangadeeswarar Koil Street,
Ondikuppam, Manavalanagar,
Thiruvallur - 602 002.

GEO TECHNICAL

Er. M.Ammaiappan, B.E., M.E., (Geo Tech) (Ph.D)
Registered Geo Technical Engineer
DTCP - Reg. No. TVLR/RGTE/2021/06/002
Thirumullaivoyal, Chennai - 600 062.

Signature Not Verified
Signed by Assistant Director
Location: Tiruvannamalai
Date: 2023.12.15 17:23:10