PLAN SHOWING THE PROPOSED CONSTRUCTION OF R.C.C. ROOF COMMERCIAL SHOP CUM RESIDENTIAL BUILDING GROUND FLOOR AT OLD NATHAM S.F NO: 663/4, NEW NATHAM SF NO: 663/4B, NATHAM PATTA NO:1644, PLOT NO: 5,6 , IN "SRI KRISHNA GARDEN", KOTTAIYUR VILLAGE AND GROUP, KOTTAIYUR TOWN PANCHAYAT, SAKKOTTAI UNION, KARAIKUDI TALUK, SIVAGANGAI DISTRICT - TAMILNADU

DTCP APPROVED LAYOUT INPRINCIPLE NO: 4223/2019, DATED ON 05.02.2020.

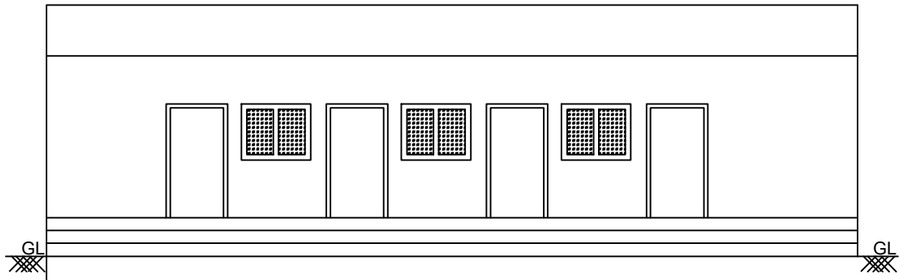

ELEVATION

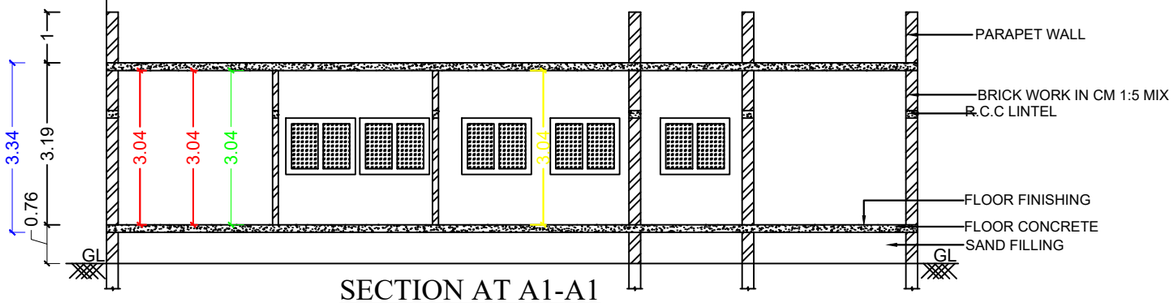

SECTION AT A1-A1

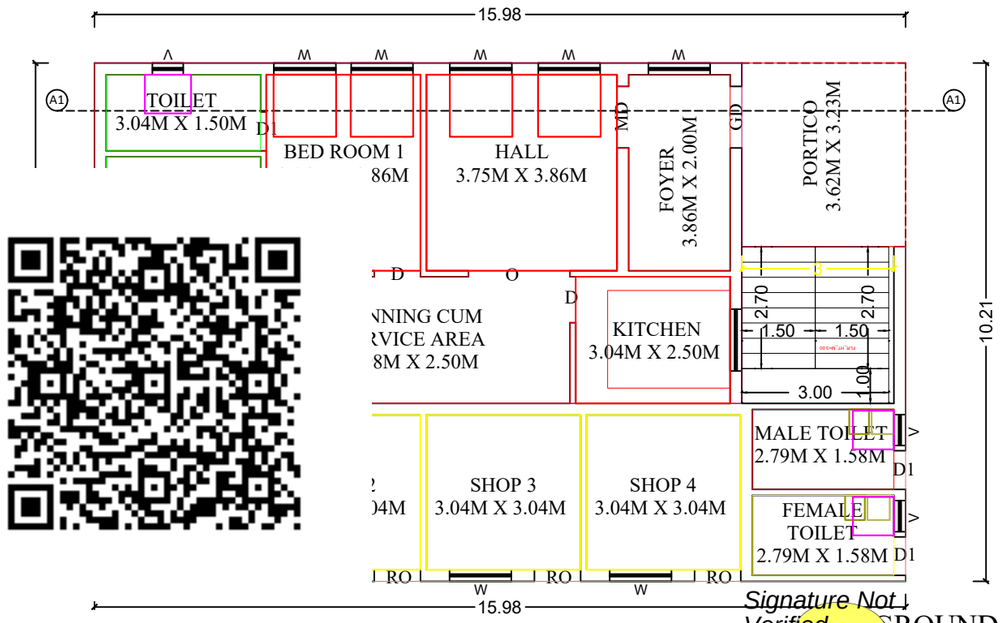

GROUND FLOOR PLAN

Signature Not Verified
Signed by Executive Officer
Location:Sivagangai
Date:2025.02.24 16:56:59

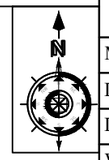

SPECIFICATIONS

1. SAND FILLING
2. P.C.C. MIX RATIO 1:5:10 40MM METAL
3. R.C.C. ISOLATED FOUNDATION
4. BRICK WORK CM MIX RATIO 1:6
5 R.C.C. 1:1.5:3 MIX AS PER IS 456 : 2000

LEGEND	FEET	METRE
MAIN DOOR -MD	4'-0" X 7'-0"	1.22 X 2.10
DOOR - D	3'-3" X 7'-0"	1.00 X 2.10
DOOR -D1	3'-0" X 7'-0"	0.91 X 2.10
WINDOW -W	4'-0" X 4'-0"	1.22 X 1.22
VENTILATOR - V	3'-0" X 2'-0"	0.91 X 0.61

AREA DETAILS	Sq.Ft	Sq.M
SITE AREA	2362.67	219.50
PRO GROUND FLOOR COMMERCIAL	709.55	65.92
PRO GROUND FLOOR RESIDENTIAL	1046.25	97.20
VACANT AREA	607.87	56.47

COLOR INDEX

- SITE / BOUNDARY AREA
- PROPOSED BUILDING
- EXISTING ROAD

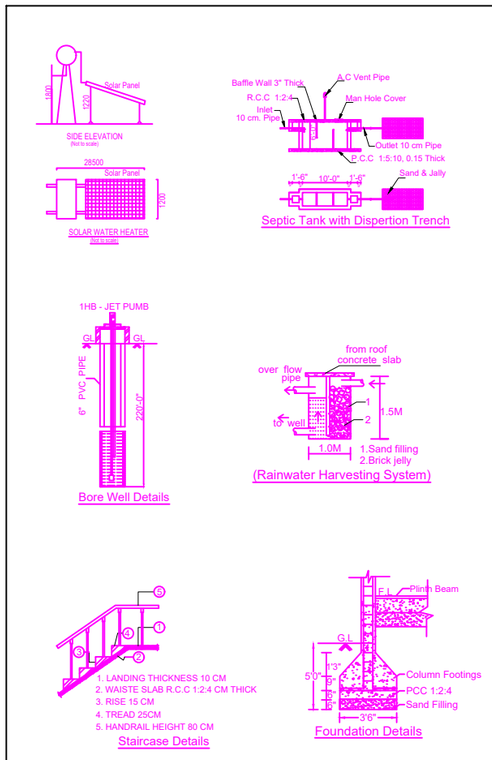

APPLICANT

B. Angayarkanni

Mrs. B. ANGAYARKANNIW/o Mr. BOOMIVEL.

ENGINEER

Er.M.KAVI GANESH, D.C.E.,
REGD. CIVIL ENGINEER, GRADE-III (R.E.),
REGD.NO: 111/LS/2019/00013
KARAIKUDI SPECIAL GRADE MUNICIPALITY,
KARAIKUDI TOWN - 630 001,
SIVAGANGAI DISTRICT, TAMIL NADU
GV PLANNERS & BUILDERS
CELL NO: 85088 41705.

OFFICE USE