SHEET NO:2

PLAN SHOWING THE PROPOSED CONSTRUCTION OF SCHOOL BUILDING IN S.NO: 18/2B1B,2C,3A1B1, 20/7B,8B,9B,15B,17 AT SILAYANERI VILLAGE,MADURAI NORTH TALUK,MADURAI CORPORATION, MADURAI DISTRICT. (C.WARD-003, ZONE-1)

ELEVATION

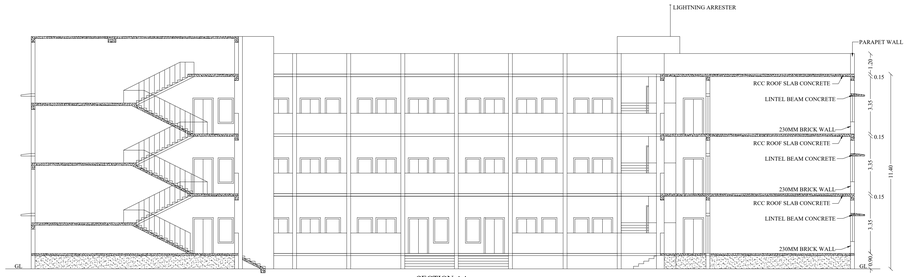

SECTION AA

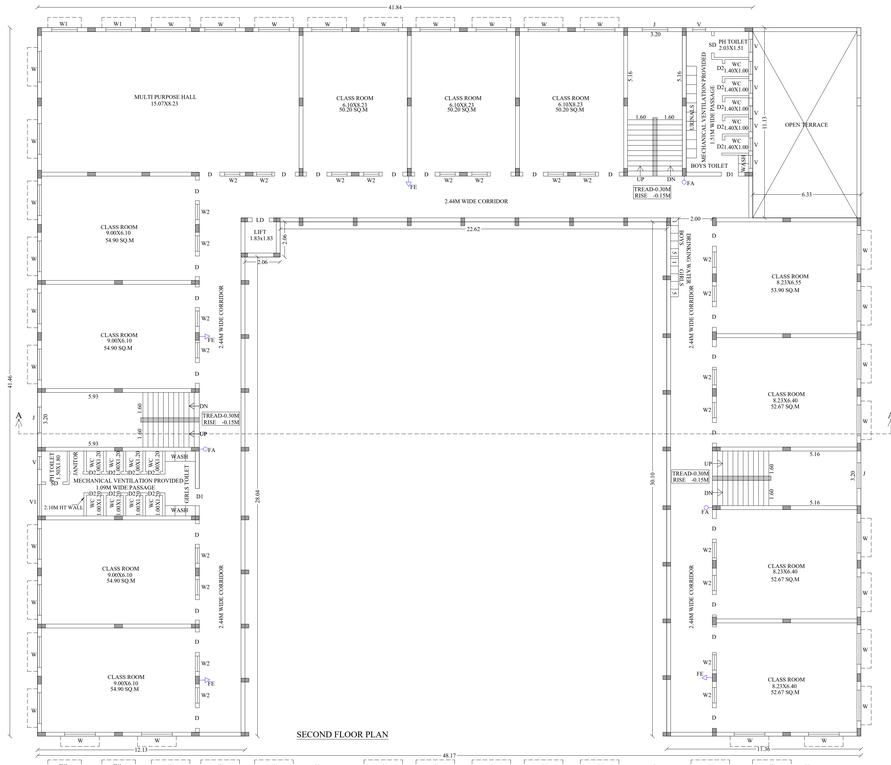

SECOND FLOOR PLAN

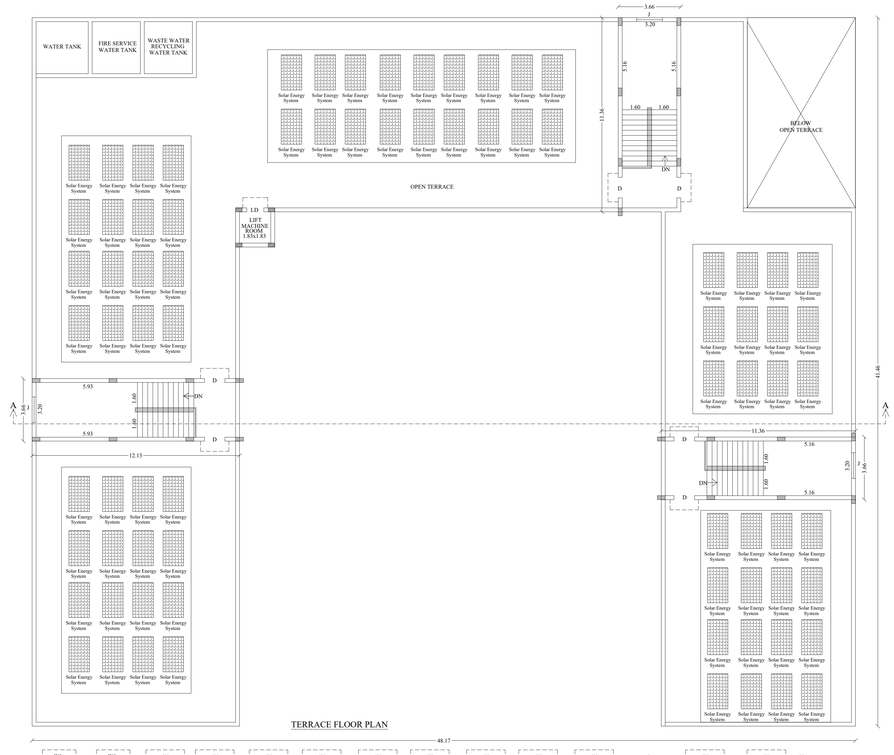

TERRACE FLOOR PLAN

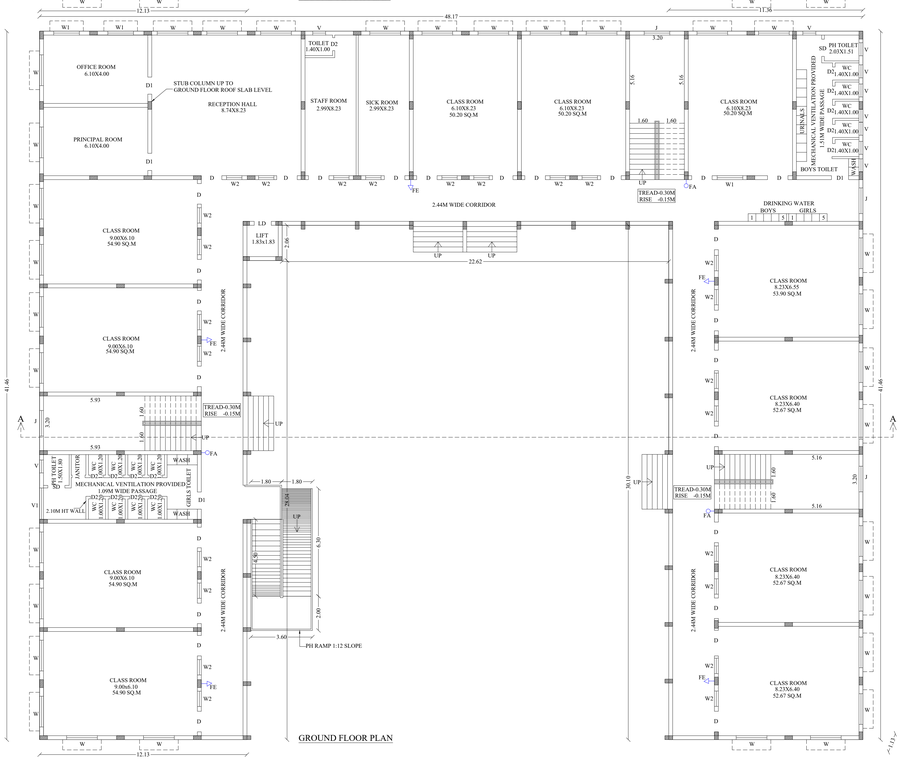

GROUND FLOOR PLAN

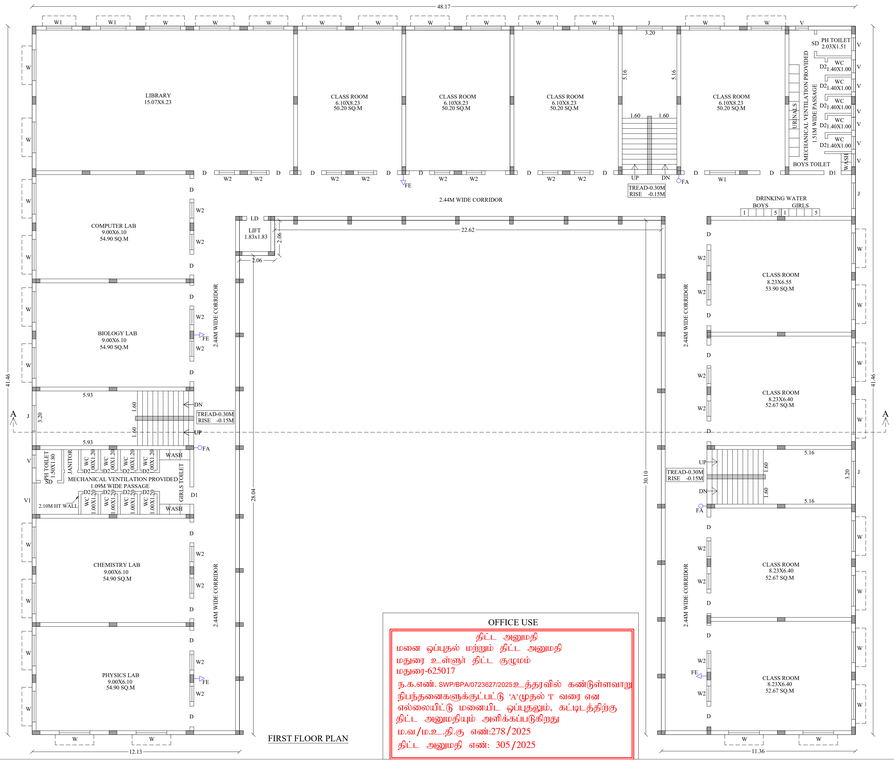

FIRST FLOOR PLAN

OFFICE USE

திட்ட அனுமதி
மனை ஒப்புதல் மற்றும் திட்ட அனுமதி
மதுரை உள்ளூர் திட்ட குழுமம்
மதுரை-625017
ந.க.எண். SWP/BPA/072627/2025உத்தரவில் கண்டுள்ளவாறு நிபந்தனைகளுக்குட்பட்டு 'A'முதல் 'I' வரை என வகுக்கப்பட்டு மனையிடு ஒப்புதலுட் கட்டிடத்திற்கு திட்ட அனுமதியும் அளிக்கப்படுகிறது
ம.வ/ம.உ...தி.கு எண்:278/2025
திட்ட அனுமதி எண்: 305/2025

SITE EXTENT

S.NO:18/2B1B	342.00
S.NO:18/2C	1750.00
S.NO:18/3A1B1	430.00
S.NO:20/7B	609.00
S.NO:20/8B	635.00
S.NO:20/9B	844.00
S.NO:20/15B	98.00
S.NO:20/17	100.00
TOTAL	4808.00

(SCALE-1:100)

JOINERY DETAILS

D	DOOR	1.20x2.10
D1	DOOR	1.20x2.10
D2	DOOR	0.76x2.10
LD	LIFT DOOR	1.00x2.10
SD	SLIDING DOOR	1.00x2.10
W	WINDOW	1.80x1.50
W1	WINDOW	1.50x1.50
W2	WINDOW	0.90x1.52
V	VENTILATOR	0.76x0.76
V1	VENTILATOR	1.83x0.76
J	JALLY	1.50x1.50

AREA DETAILS

Descriptions	Non FSI SQ.M	FSI SQ.M	Total Area SQ.M
Area of the Ground Floor		1258.50	1258.50
Area of the First Floor		1258.50	1258.50
Area of the Second Floor		1188.05	1188.05
Area of the Head Rooms	127.56		127.56
Total Floor Area	127.56	3705.05	3832.61

Floor space Index= $\frac{3705.05}{4808.00}$ = 0.77<2.00

OSR REQUIRED= $\frac{4808.00}{100.00}$ X10%=480.80 SQ.M

OSR PROVIDED= 483.47 SQ.M (10.05%)

NO.OF CLASS ROOM = (30 ROOMS)

GROUND FLOOR - 4 NOS (9x6.10) =219.60 SQ.M
GROUND FLOOR - 3 NOS (6.10x8.23)=150.60 SQ.M
GROUND FLOOR - 1 NOS (8.23x6.55)= 53.90 SQ.M
GROUND FLOOR - 3 NOS (8.23x6.40)=158.01 SQ.M
FIRST FLOOR - 4 NOS (6.10x8.23)=200.81 SQ.M
FIRST FLOOR - 1 NOS (8.23x6.55)= 53.90 SQ.M
FIRST FLOOR - 3 NOS (8.23x6.40)=158.01 SQ.M
SECOND FLOOR - 4 NOS (9x6.10) =219.60 SQ.M
SECOND FLOOR - 3 NOS (6.10x8.23)=150.60 SQ.M
SECOND FLOOR - 1 NOS (8.23x6.55)= 53.90 SQ.M
SECOND FLOOR - 3 NOS (8.23x6.40)=158.01 SQ.M

NO.OF CLASS ROOM-30 NOS TOTAL=1576.94 SQ.M

NO.OF STUDENTS: 40X30/CLASS ROOM = 1200 NOS
NO.OF STUDENTS:-
BOYS:-600 NO'S GIRLS:-600 NO'S

SANITARY REQUIREMENTS:-

SANITARY UNIT			NO.OF STUDENTS	REQUIRED	PROVIDED
WATER/WC/ CLOSET	BOYS	ONE FOR 40 BOYS	600	15	18
	GIRLS	ONE FOR 25 GIRLS	600	24	27
DRINKING WATER	BOYS	ONE FOR 50 BOYS	600	12	15
	GIRLS	ONE FOR 50 GIRLS	600	12	15
URINALS	BOYS	ONE FOR 20 BOYS	600	30	30

PARKING CALCULATION CORPORATION AREA EDUCATIONAL (SCHOOL) BUILDING

VEHICLE	PARKING AREA DESCRIPTION	AREA SQ.M	REQUIRED NOS	PROVIDED NOS
CAR	1 car space for every 100sq.m of class room area or part thereof	1576.94	16	23
TWO WHEELER	1 two wheeler space for every 50sq.m of class room areapart thereof	1576.94	32	36
CYCLE SPACE	one cycle space for every 100sq.m of class room area or part thereof.	1576.94	158	229

NOTE:-

1.BORE WELL WITH TANK AND CORPORATION WATER SUPPLY WILL BE PROVIDED

2.SULLAGE WASTE FROM TOILET WILL BE CONNECTED INTO EXISTING CORPORATION UNDER GROUND DRAINAGI SYSTEM

3.RAIN WATER PERCOLATION PITS OF 4 NOS.PROVIDED@ 1/30SQ.M OF PLINTH AREA @ 3M C/C

4.RAIN WATER PERCOLATION BED 1.0M WIDE WILL BE PROVIDED AROUND THE BUILDING AS PER GO (MS) NO:138 DATE 11-02-02

5.PERCOLATION BED OUT SIDE ALONG PLINTH TO BE PROVIDED.

6.OUTER PAVEMENTS SLOPING TO WARDS RAIN WATER PERCOLATION PIT ALONG PLINTH

7.RAIN WATER TAKEN TO THE BORE WELL THROUGH 150MM DIA PIPES

8.RAIN WATER COLLECTED FROM OPEN TERRACE SHALL BE COLLECTED THROUGH PIPES AND LED INTO A FILTER PIT (SIZE 60x60x60CM) WITH APPROPRIATE FILTER MATERIAL AND THEN LED INTO COLLECTION TANK

9.SOLAR WATER HEATER LINE ARRANGEMENTS WILL BE PROVIDED

10.ALL DIMENSIONS ARE IN METER.

11.FA - FIRE ALARM

12.FE - FIRE SAFETY MEASURES PROVIDED.

Er.T.S.JANARTHANAN
B.E(Civil),M.G.C.E.E,M.I.E.
Registered Structural Engineer (LR/A)
Reg. No. 80261/2015-Civil
2-A, Pasilian 5th Street, near Thandhi Sandhi
MADURAI - 625 001
Phone: 0452-4310181 Mobile: 9787747777

STRUCTURAL ENGINEER

APPLICANT

Er.M.SOBINATH, B.E.,
Consulting Civil Engg & Surveyor
Madurai (T) - 09 (MC 15/2002 (DC-2))
No.48/2 Ground Floor, Sri Ram Nagar, N.S. Nagar Street
Sellur, Madurai-625 020
Cell No: 97122-41571, 97903-90916
Email: sobinatha.m@gmail.com

REGISTERED ENGINEER/ ARCHITECT

SHEET NO:1

PLAN SHOWING THE PROPOSED CONSTRUCTION OF SCHOOL BUILDING IN S.NO: 18/2B1B,2C,3A1B1, 20/7B,8B,9B,15B,17 AT SILAYANERI VILLAGE,MADURAI NORTH TALUK,MADURAI CORPORATION, MADURAI DISTRICT. (C.WARD-003, ZONE-1)

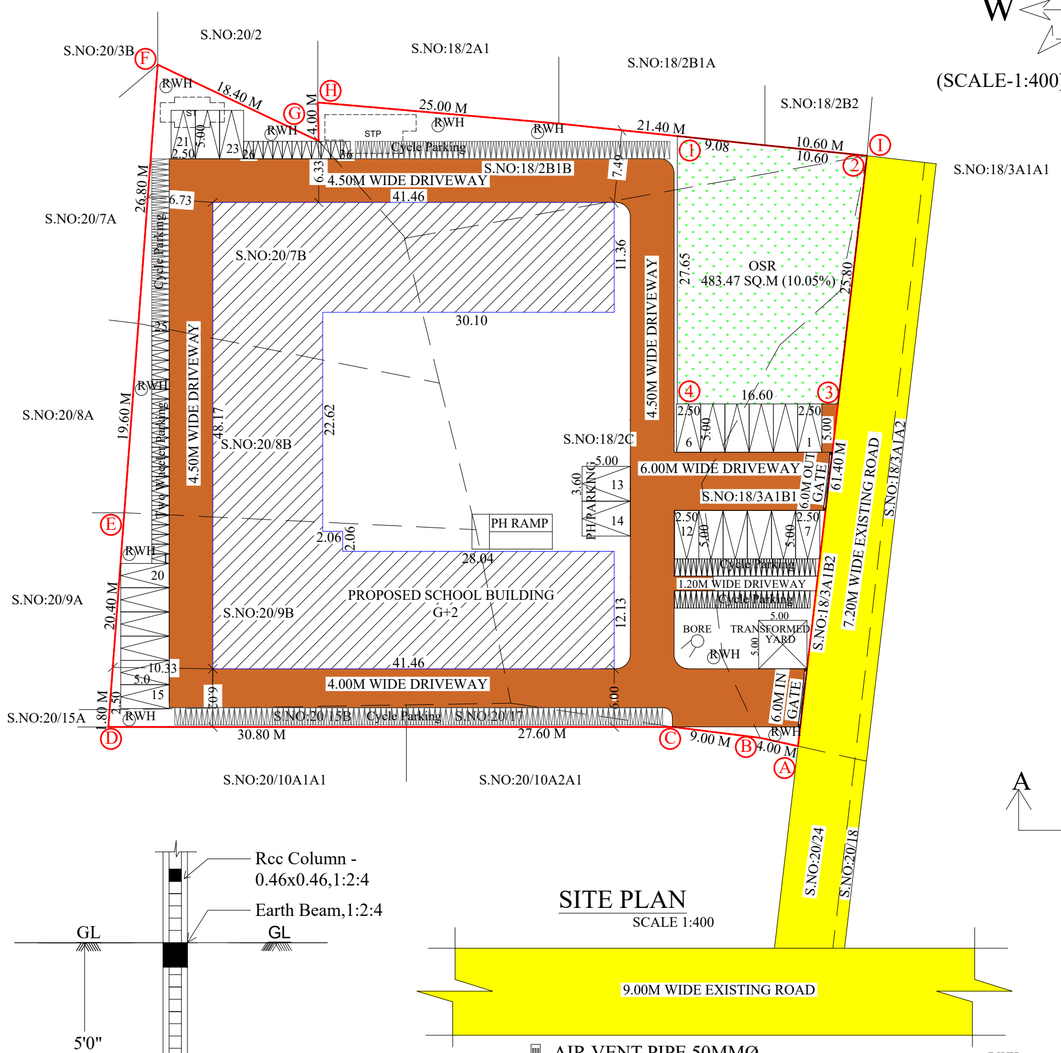

SITE PLAN
SCALE 1:400

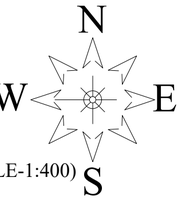

REFERENCE	
SITE BOUNDARY	
EXISTING ROAD	
DRIVE WAY	
PROPOSED BUILDING	
OSR	

OFFICE USE

திட்ட அனுமதி
மனை ஒப்புதல் மற்றும் திட்ட அனுமதி
மதுரை உள்ளூர் திட்ட குழுமம்
மதுரை-625017
ந.க.எண். SWP/BPA/0723627/2025 உத்தரவில் கண்டுள்ளவாறு நிபந்தனைகளுக்குட்பட்டு 'A'முதல் 'I' வரை என எல்லையிட்டு மனையிட ஒப்புதலும், கட்டிடத்திற்கு திட்ட அனுமதியும் அளிக்கப்படுகிறது
ம.வ/ம.உ.தி.கு எண்:278/2025
திட்ட அனுமதி எண்: 305/2025

SITE EXTENT

S.NO:18/2B1B	342.00
S.NO:18/2C	1750.00
S.NO:18/3A1B1	430.00
S.NO:20/7B	609.00
S.NO:20/8B	635.00
S.NO:20/9B	844.00
S.NO:20/15B	98.00
S.NO:20/17	100.00
TOTAL	4808.00

AREA DETAILS

Descriptions	Non FSI SQ.M	FSI SQ.M	Total Area SQ.M
Area of the Ground Floor		1258.50	1258.50
Area of the First Floor		1258.50	1258.50
Area of the Second Floor		1188.05	1188.05
Area of the Head Rooms	127.56		127.56
Total Floor Area	127.56	3705.05	3832.61

Floor space Index= $\frac{3705.05}{4808.00}$ = 0.77<2.00

OSR REQUIRED= $\frac{4808.00}{100.00}$ X10%=480.80 SQ.M

OSR PROVIDED= 483.47 SQ.M (10.05%)

PARKING CALCULATION CORPORATION AREA
EDUCATIONAL (SCHOOL) BUILDING
NO.OF CLASS ROOM = (30 ROOMS)
CLASS ROOM AREA =1576.94 SQ.M

VEHICLE	PARKING AREA DESCRIPTION	AREA SQ.M	REQUIRED NOS	PROVIDED NOS
CAR	1 car space for every 100sq.m of class room area or part thereof	1576.94	16	23
TWO WHEELER	1 two wheeler space for every 50sq.m of class room orpart thereof	1576.94	32	36
CYCLE SPACE	one cycle space for every 10sq.m of class room area or part thereof.	1576.94	158	229

ALL DIMENSIONS ARE IN METER.

FA - FIRE ALARM.

FE - FIRE SAFETY MEASURES PROVIDED.

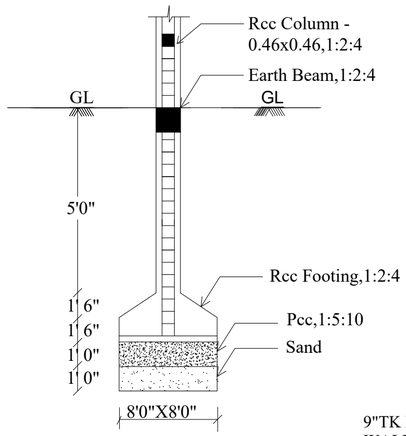

RCC COLUMN DETAILS

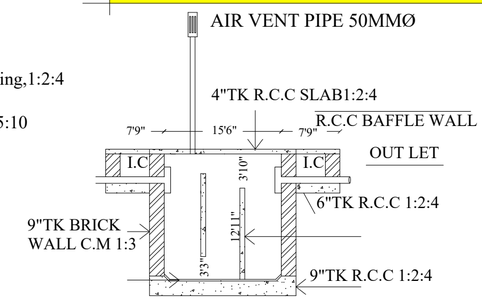

SECTION

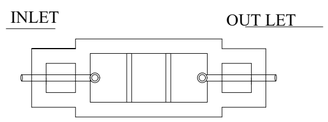

PLAN

SEPTIC TANK DETAILS
SCALE 1"=8'0"

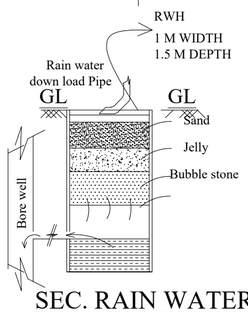

SEC. RAIN WATER HARVEST PIT

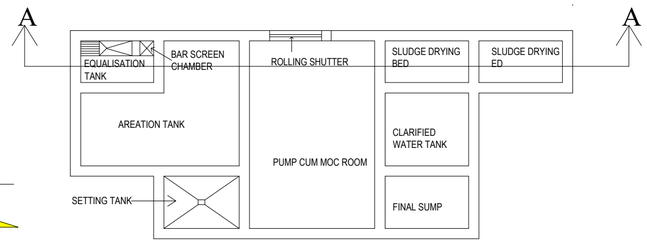

SEWAGE TREATMENT PLANT PLAN

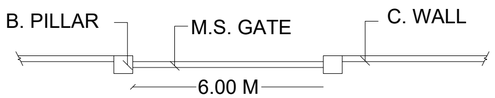

Plan
Compound Wall & Gate Details

Signature Not Verified
Signed by Assistant Director
Location:Madurai
Date:2025.12.19 19:0

APPLICANT

Er.T.S.JANARTHANAN
M.E.(Struc),FACCE(I),MICI.,
Registered Structural Engineer (LPA)
Reg. No. SE/03/2070 (Gr.I)
7-A, Panthadi 8th Street, Near Thavittu Sandhai
MADURAI - 625 001
Phone: 0452-4370596 Mobile: 97877-

STRUCTURAL ENGINEER

Er.M.GOBINATH, B.E.,
Consulting Engineer & Surveyor
Madurai DTCP RE 09/2020 (Gr.II)
No.48/1, Zagee Shops R.S. Naidu Street
Sellur, Madurai-625 002
Cell No: 80120 41771, 77082 60916
Email: civivilla.madurai@gmail.com

REGISTERED ENGINEER/ ARCHITECT