PLAN SHOWING THE PROPOSED CONSTRUCTION IN GROUND FLOOR AND FIRST FLOOR OF A R.C.C ROOF RESIDENTIAL BUILDING IN

OLD S.F. NO : 600/1A1A1A1, NEW S.F.NO: 600/16, PLOT NO: 6, AT SEDUVALAI VILLAGE & PANCHAYAT, ANAICUT TALUK AND VELLORE DISTRICT.

SCALE: 1 INCH = 8 FEET (OR) 1:100.

NAME OF OWNER : M.SEKAR.,
CELL : 96005 50677.

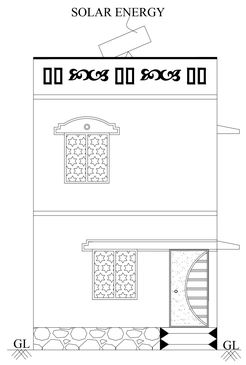

ELEVATION

1. Parapet wall
2. Weathering course
3. R.C.C 1:2:4 roof slab
4. Brick work in Cm1:5
5. P.C.C 1:5:10
6. Floor finishing
7. Sand filling
8. Lintel cum sunshade

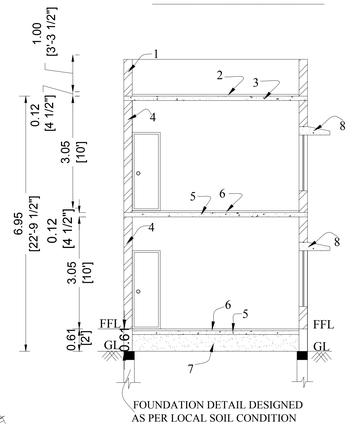

SECTION ON "JS"

SITE PLAN DETAILS:

SCALE : 1 INCH = 16 FEET
OLD S.F.NO : 600/1A1A1A1,
NEW S.F. NO :600/16,
PLOT NO : 6,
SEDUVALAI VILLAGE &
PANCHAYAT,
ANAICUT TALUK,
VELLORE DISTRICT.

SITE PLAN :

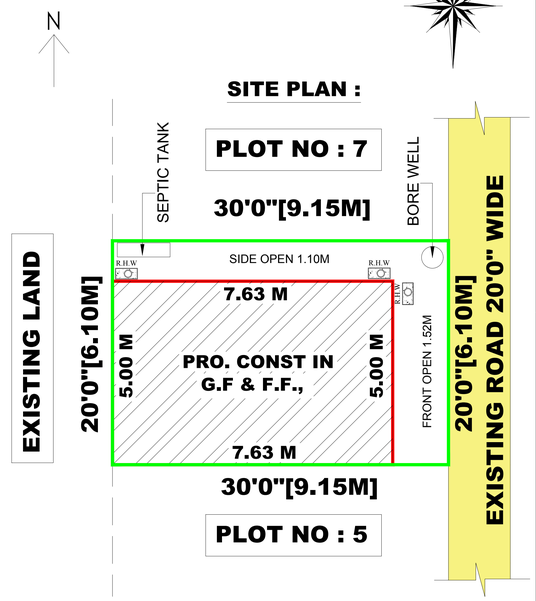

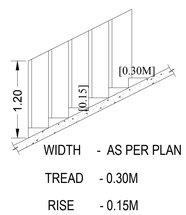

STAIRCASE DETAILS

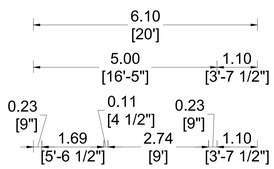

20'0"[6.10M]

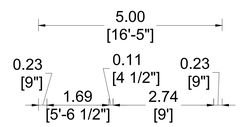

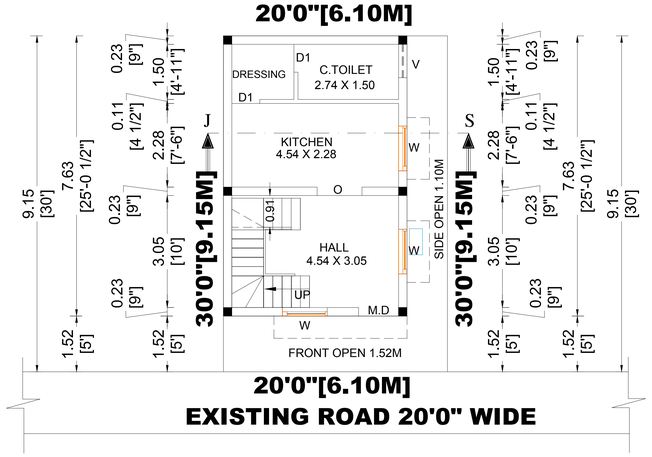

PRO.GROUND FLOOR PLAN

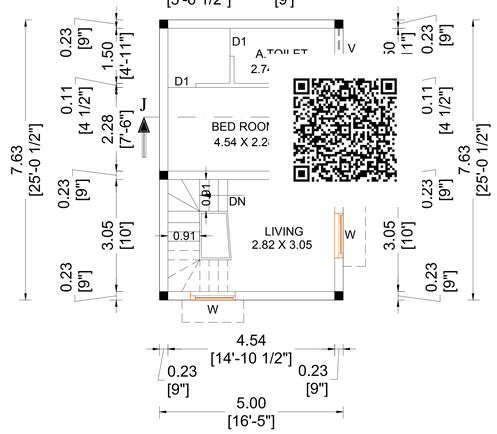

PRO. FIRST FLOOR PLAN

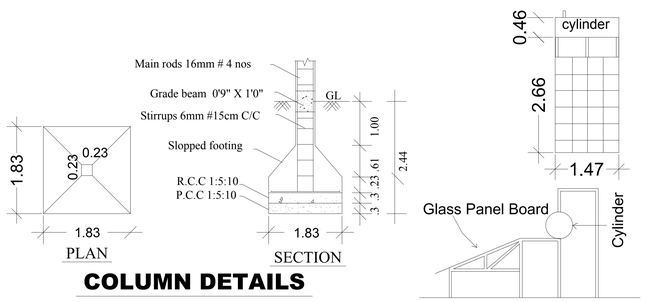

COLUMN DETAILS

SOLAR ENERGY SYSTEM

SPECIFICATIONS

ALL THE DETAILS ARE SHOWN IN SECTION ON 'JS'

JOINERY DETAILS

		Ft	M
M D	MAIN DOOR	3'6" X 7'0"	1.07 X 2.13
D	DOOR	3'0" X 7'0"	0.91 X 2.13
D1	DOOR	2'6" X 7'0"	0.76 X 2.13
W	WINDOW	5'0"X 4'0"	1.52 X 1.22
V	VENTILATOR	3'0" X 3'0"	0.91 X 0.91

COLOUR INDEX

OWNER'S BOUNDARY SHOWN IN GREEN
PROPOSED CONSTRUCTION SHOWN IN RED
EXISTING ROAD SHOWN IN YELLOW

AREA DETAILS	Sq.ft	Sq.m
TOTAL AREA OF THE SITE	600.00	55.00
PROPOSED GROUND FLOOR AREA	410.66	38.15
PROPOSED FIRST FLOOR AREA	410.66	38.15
OPEN AREA OF THE SITE	189.34	17.59

FLOOR SPACE INDEX

$$\text{FLOOR AREA RATIO} = \frac{\text{All Floor area}}{\text{Plot area}} = \frac{76.30}{55.00} = 1.39 < 2.00$$

NO OF DWELLING UNIT - 1 NO

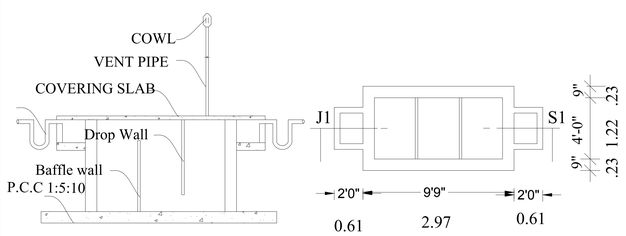

SECTION ON JS1 PLAN

Using 'U' type trap 2 Nos in inlet, outlet & Vent pipe will be covered with mosquito proof net in inner side and top of the vent pipe

SEPTIC TANK DETAILS

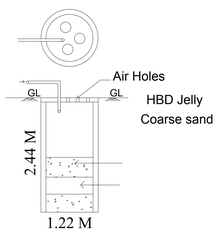

BATH & WASH BASIN PIPE LINE CONNECTION IS DIRECTLY CONNECTED TO THE RECTANGLE PIT FOR RECYCLING THE WASTE WATER.

WASTE WATER RECYCLE UNIT

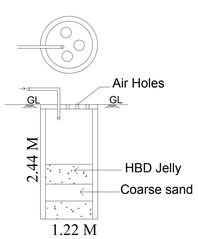

RWH UNIT WITH SIZE 4'0" x 4'0" x 8'0"USING 150MM DIA PVC PIPE WITH NECESSARY FITTINGS.

RAIN WATER HARVESTING TANK DETAIL

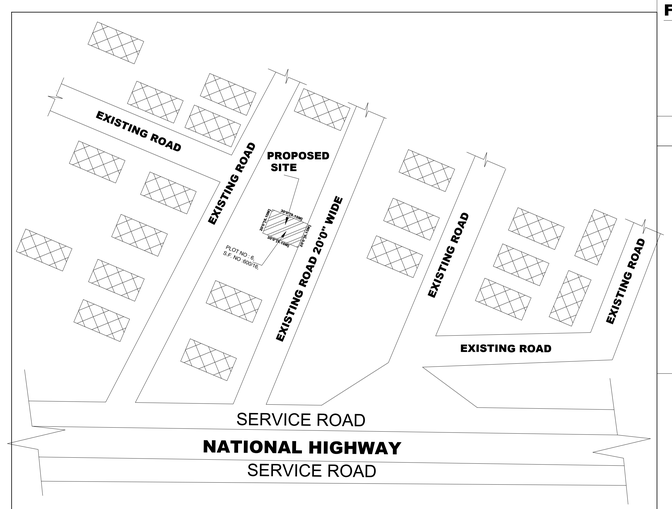

KEY PLAN (N.T.S)

OWNER'S SIGNATURE

Er. V. JAISANKAR, D.C.E.,
Registered Engineer
Grade-III (RE) With Vellore Corporation
Reg. No. RE/Gr-III/020/2019 Dt. 29.04.2019
No. 8, Ma. Pa. Sarathi Nagar, Kagithapattadai,
Vellore - 632 012.Cell : 94434 03524

REGISTERED ENGINEER SIGNATURE

Signature Not Verified
Digitally signed by Jaisankar Vellore
Location: Vellore
Date: 2024.04.29 12:07:00 IST