PLAN SHOWING THE PROPOSED CONSTRUCTION OF DWELLING HOUSE BUILDING IN PLOT NO:345-WEST PART,S.NO:120/19,AT "PLEASANT NAGAR" THALAPATHISAMUTHIRAM PART TWO VILLAGE AND THALAPATHISAMUTHIRAM PANCHAYAT, NANGUNERI TALUK, TIRUNELVELI DISTRICT.

(REGULARISATION APPROVAL NO: 08/2023)

APPLICANT :

1) MR. S.RAVICHANDRAN S/O. MR. SIVALINGAM

2) MRS. R.AMUTHA W/O. MR. S.RAVICHANDRAN

N

AREA STATEMENTS

		Sq.mt	Sq.ft
SITE AREA	-	102.19	1100.00

PROPOSED FLOOR AREA

GROUND FLOOR AREA	-	65.52	705.25
FIRST FLOOR AREA	-	25.27	272.00
TOTAL FLOOR AREA	-	90.79	977.25

SCHEDULE OF JOINERIES

D	-	DOOR	-	1.00 X 2.10
D1	-	DOOR	-	0.91 X 2.10
D2	-	DOOR	-	0.76 X 2.10
O	-	OPEN	-	0.91 X 2.10
W	-	WINDOW	-	0.37 X 1.52
W1	-	WINDOW	-	1.06 X 1.52
W2	-	WINDOW	-	1.06 X 0.61
W3	-	WINDOW	-	0.61 X 1.52
V	-	VENTILATOR	-	0.91 X 0.61

COLOR CODE REFERENCE

SITE	-	
PROPOSED BUILDING	-	
EXISTING ROAD	-	

NOTES

ALL DIMENSIONS ARE IN METERS.

WASTE WATER USED TO BE USED IN GARDEN.

RAIN WATER HARVESTING TO BE PROVIDED.

SCALE

TOPO PLAN	-	NOT TO SCALE
SITE PLAN	-	1:200
BUILDING PLAN	-	1:100

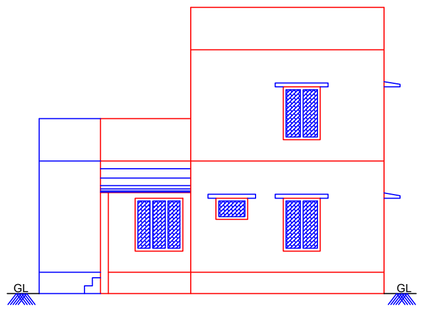

ELEVATION

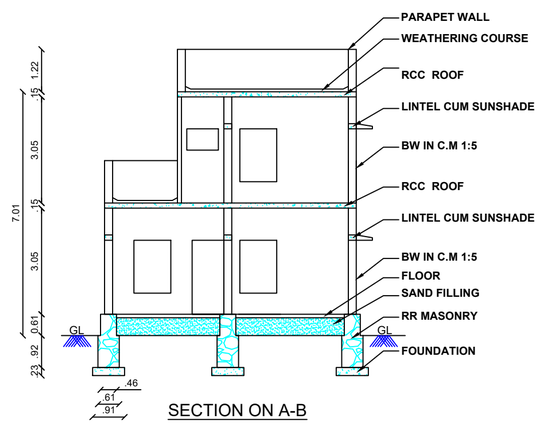

SECTION ON A-B

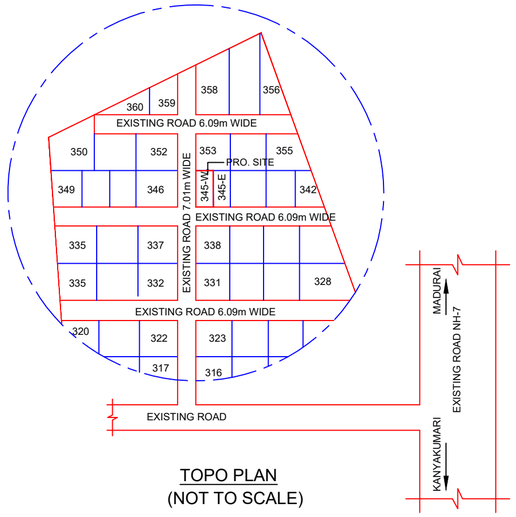

TOPO PLAN
(NOT TO SCALE)

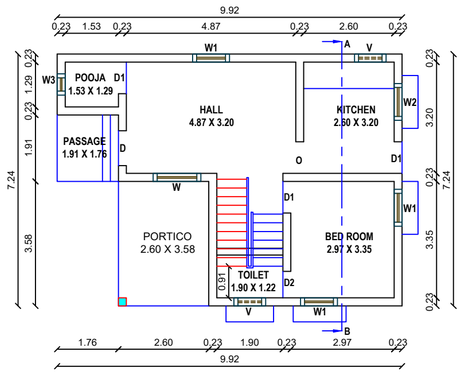

GROUND FLOOR PLAN

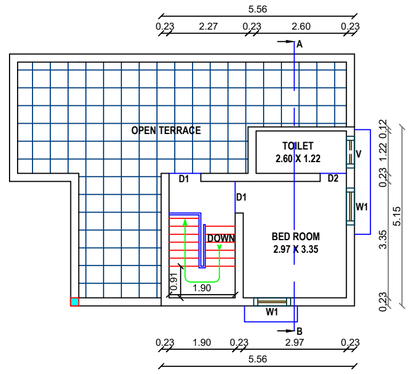

FIRST FLOOR PLAN

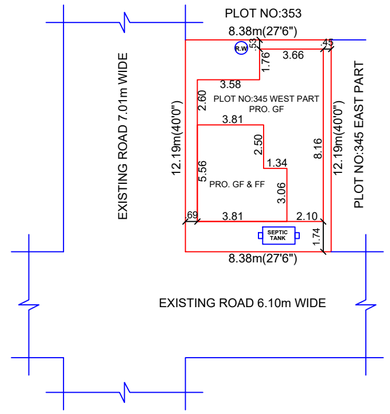

SITE PLAN
(SCALE 1:200)

OFFICE USE

APPLICANT

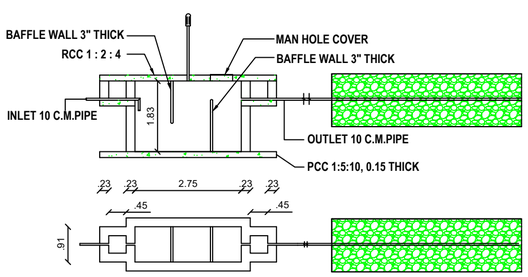

SEPTIC TANK & TRENCH

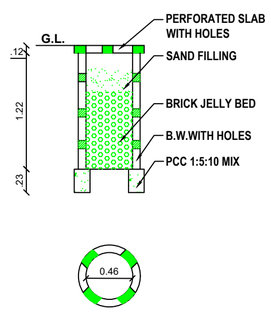

RAIN WATER HARVEST

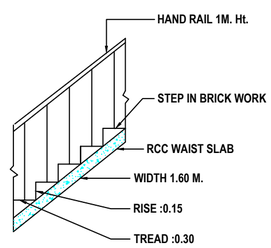

STAIR DETAIL

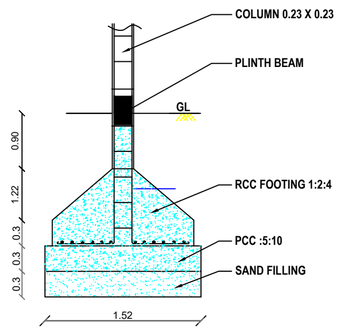

COLUMN DETAILS

ENGINEER

Signature Not Verified
Signed by Village Panchayat President
Location:Tirunelveli
Date:2024.01.27 12:02:10