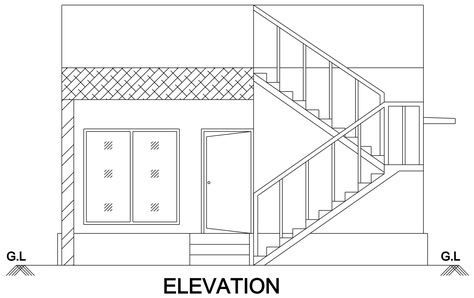

ELEVATION

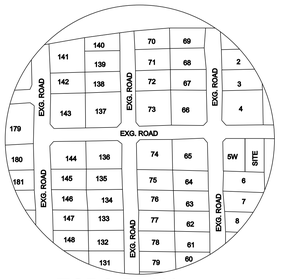

TOPO PLAN

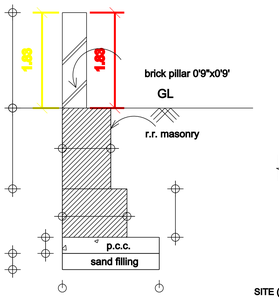

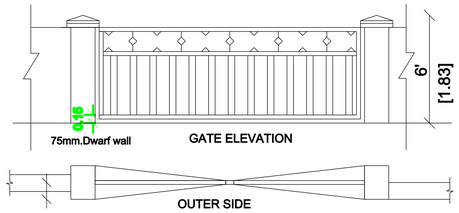

PLAN OF COMPOUND WALL

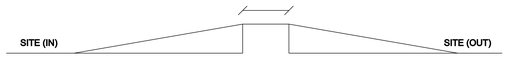

SECTION ON DWARF WALL (DW)

COMPOUND WALL DETAIL

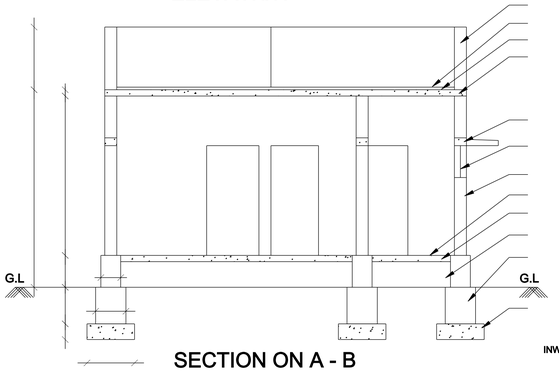

SECTION ON A - B

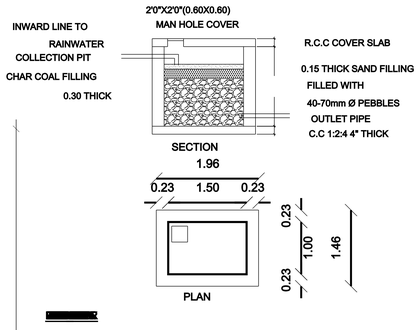

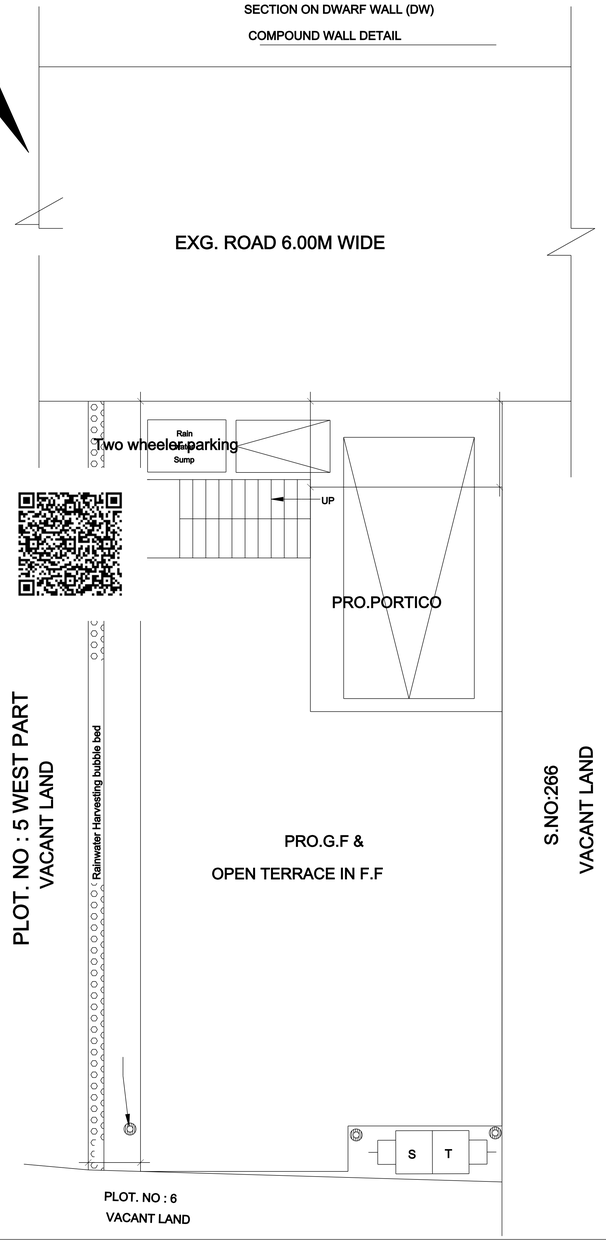

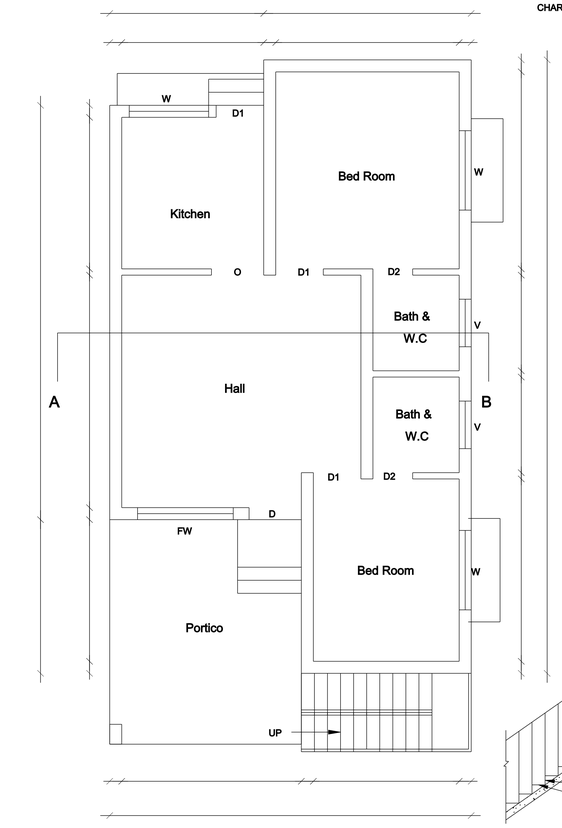

GROUND FLOOR PLAN

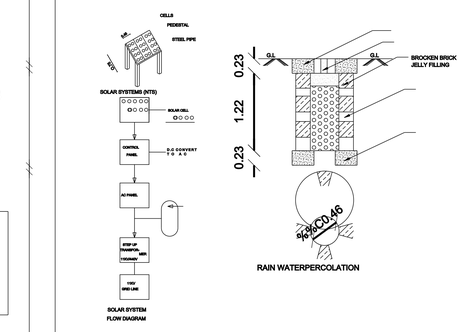

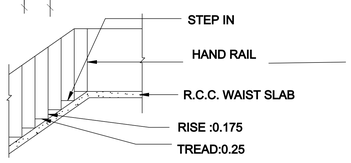

STAIR DETAILS

PLAN SHOWING THE PROPOSED CONSTRUCTION OF A HOUSE

BUILDING IN PLOT NO: 5 EAST PART, S.NO: 267/ 12A1A1, SUTHARSUN

NAGAR, KEELANATHAM VILLAGE, KEELANATHAM PANCHAYAT,

PALAYAMKOTTAI PANCHAYAT UNION, TIRUNELVELI DISTRICT.

TAMIL NADU COMBINED DEVELOPMENT RULES, 2019

Building ht	Road Wide	Plot Width	Details		Required	Availabel
3.78 mt	6.00 mt	7.92 mt	35(E(i)	Front Set Back	1.50	1.64
			35(E(ii)	Side Set Back		
				Side 1	1.00 ON ONE SIDE	1.00
				Side 2		Nil
			35(E(iii)	Rear Set Back	Nil	Nil

COLOURS	AREA DETAILS	SQ.MT	SQ.FT
	SITE AREA	117.45	1264.25
	PRO. GROUND FLOOR AREA	83.61	900.00
	OPEN SPACE	33.84	364.25
	EXG.ROAD		

FLOOR SPACE INDEX

F.S.I = PRO. FLOOR AREA / SITE AREA

= 83.61 / 117.45 = 0.712

F.S.I = 0.712 < 2.00

PARKING CALCULATION

50 SQ.MT = NIL

50 SQ.MT - 75 SQ.MT = 1 TWO WHEELER

75 SQ.MT - 100 SQ.MT = 1 CAR SPACE FOE 2 DWELLINGS

& 1 TWO WHEELER FOR EACH 2 DWELLINGS

ABOVE 100 SQ.MT =1 CAR SPACE FOR EVERY 100 SQ.MT

TOTAL DWELLING AREA = 83.61 SQ.MT SAY

REQUIRED PARKING = 1 TWO WHEELER PARKING

AVAILABLE PARKING = 1 TWO WHEELER PARKING

JOINERIES:-

D	DOOR	1.00 X 2.10
D1	DOOR 1	0.91 X 2.10
D2	DOOR 2	0.76 X 2.10
O	OPEN	1.00 X 2.10
FW	FRENCH WINDOW	1.83 X 1.83
W	WINDOW	1.52 X 1.52
KW	KITCHEN WINDOW	1.22 X 0.91
V	VENTILATOR	0.91 X 0.61

NOTE:-

- All dimensions are in metre & Scale -1:100
- Drinking water to be provided
- Solar water heating system to provided
- Chimney&exhaust fan to be provided in kitchen
- Perculation pit to be provided
- 'U' traps provided in septic tank to prevent curb breeding of mosquitoes

NOTE:-

SITE APPROVED INUNAUTHORISED PLOT REGULARISTATION SCEHME G.O(M.S) NO78

DATE 04.05.2017 IN ROC NO B6/814/2019 DATE 01/ 06 /2019

SOLD OUT PLOT FRAME WORK NO: 19

APPLICANT:-

ENGINEER:-

Signature Not Verified
Signed by Sri. Ponnaiyan Thevar
President
Palayamkottai Township Panchayat
Date: 2024.06.25 11:11:45 IST