PLAN SHOWING THE PROPOSED CONSTRUCTION OF GROUND FLOOR RESIDENTIAL BUILDING AT OLD SF NO : 328/7, MUTHUVATHUR VILLAGE PANCHAYAT, PULLAMBADI PANCHAYAT UNION, LALGUDI TALUK, TRICHY DISTRICT.

OWNER NAME : Mr.V.PACHAMUTHU

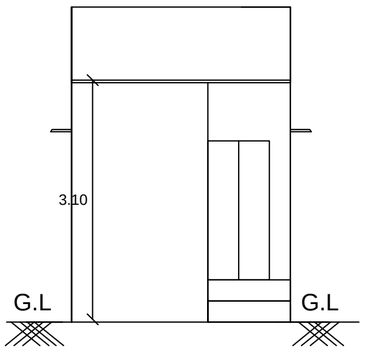

ELEVATION

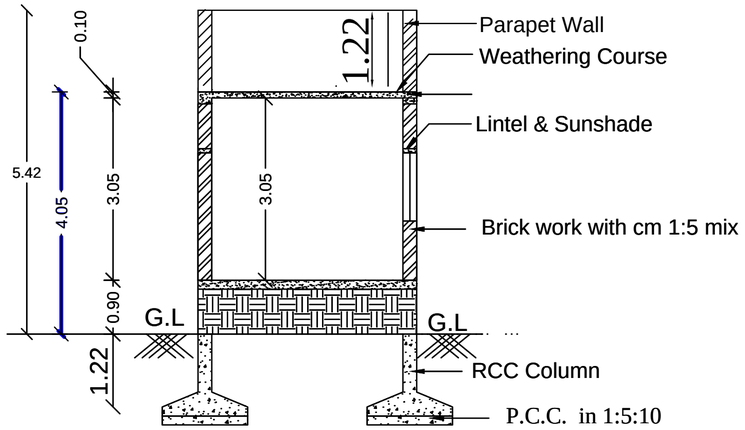

SECTION ON "AB"

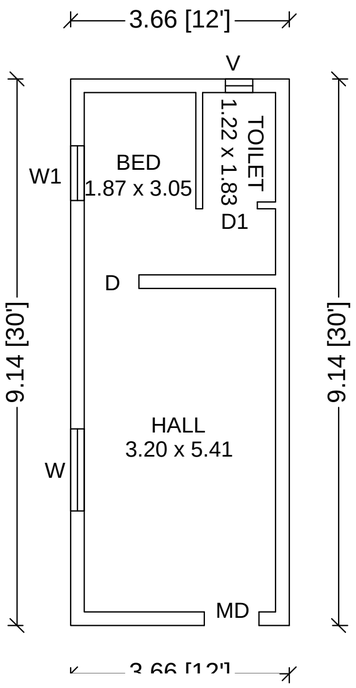

PLAN

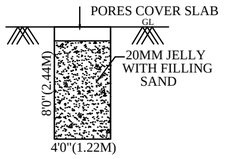

RAINWATER HARVESTING UNIT

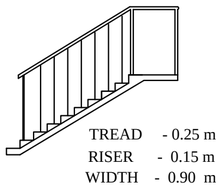

STAIRCASE DETAILS

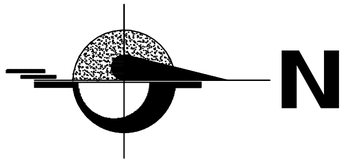

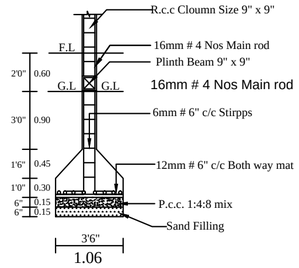

COLUMN DETIAL

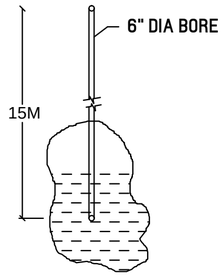

BORE WELL

(NOT TO SCALE)

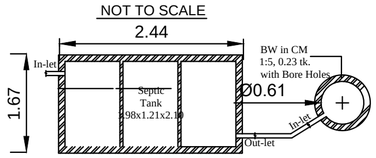

PLAN - SEPTIC TANK & SOAK PIT

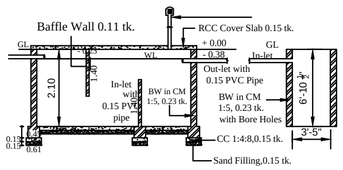

SECTION - SEPTIC TANK & SOAK PIT

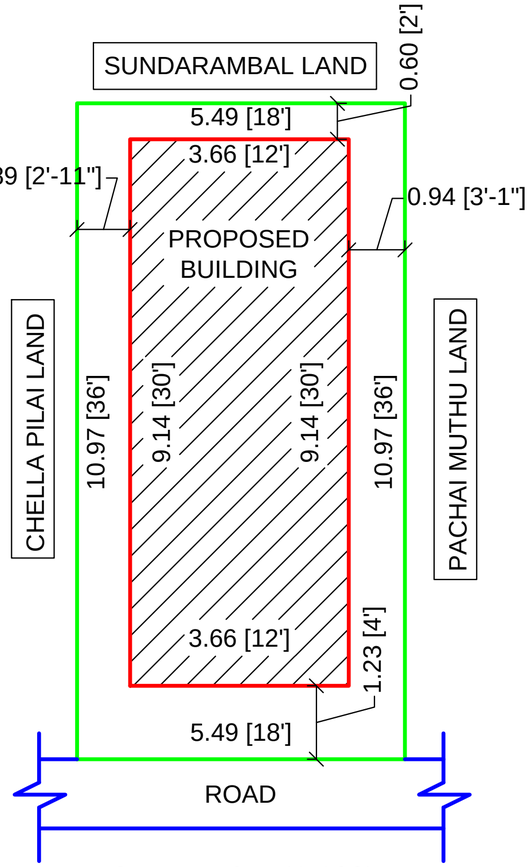

SITE PLAN (1:100)

JOINERY DETAILS:

	DESCRIPTION	FEET	METER
MD	MAIN DOOR	4'-0" X 7'-0"	1.22 X 2.10
D	INNER DOOR	3'-3" X 7'-0"	1.00 X 2.10
D1	TOILET DOOR	2'-6" X 7'-0"	0.76 X 2.10
W	WINDOW	5'-0" X 7'-0"	1.52 X 2.10
W1	WINDOW	4'-0" X 4'-6"	1.22 X 1.37
W2	WINDOW	3'-6" X 4'-6"	1.06 X 1.37
V	VENTILATER	3'-6" X 2'-6"	0.91 X 0.76

AREA DETAILS	SQ.M	SQ.FT
PLOT AREA AS PER DOCUMENT	44.00	473.61
PRO. CONSTN.GROUND FLOOR	33.44	360.00
OPEN AREA OF SITE	10.56	113.61

COLOUR INDEX

PLOT BOUNDARY SHOWN -

PROPOSED BUILDING SHOWN -

ROAD SHOWN -

ALL DIMENSION ARE IN METERS

SCALE 1:100

OWNER :

Mr.V.PACHAMUTHU

ENGINEER:

R.THIYAGARAJAN

REG.NO : RE/Gr.II/TLPA/AUG2019/170

Cadd view Drafting Services

NO.1 TOLLGATE
TRICHY
MOB:9943437420

Signature Not Verified
Signed by Village Panchayat President
Location:Tiruchirappalli
Date:2025.01.03 07:24:50