PLAN OF A PROPOSED RESIDENTIAL BUILDING IN GROUND FLOOR PLAN IN RSY NO:163/3 AT ONIMOOLA, IN ERUMAD-1 VILLAGE, PANDALUR - TALUK ,CHERANGODE (PO)

INPRINCIPLE LAYOUT NO: k.t(t)/e.C.c.,.(jpk) vz: NAME OF THE OWNER : ( Mr.KANNAN.S)

**DETAILED PLAN**
**1:100**

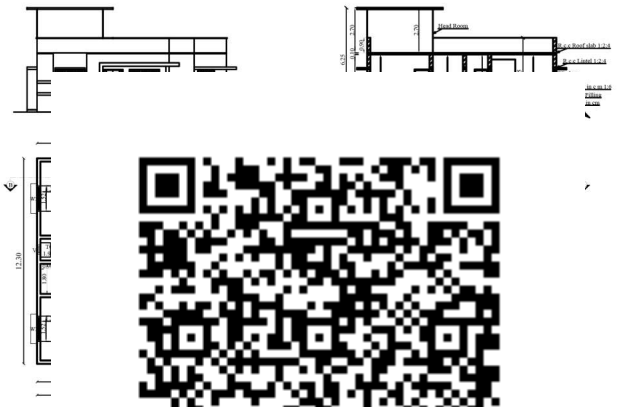

**KEY PLAN**
**NOT TO SCALE**

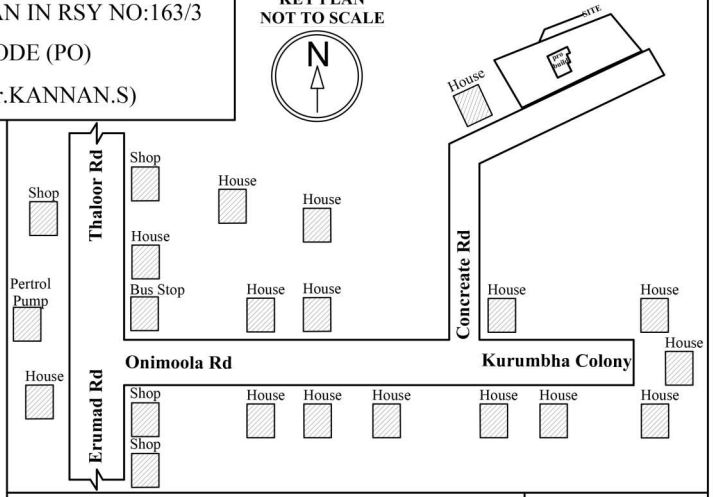


**SITE PLAN**
**1:100**

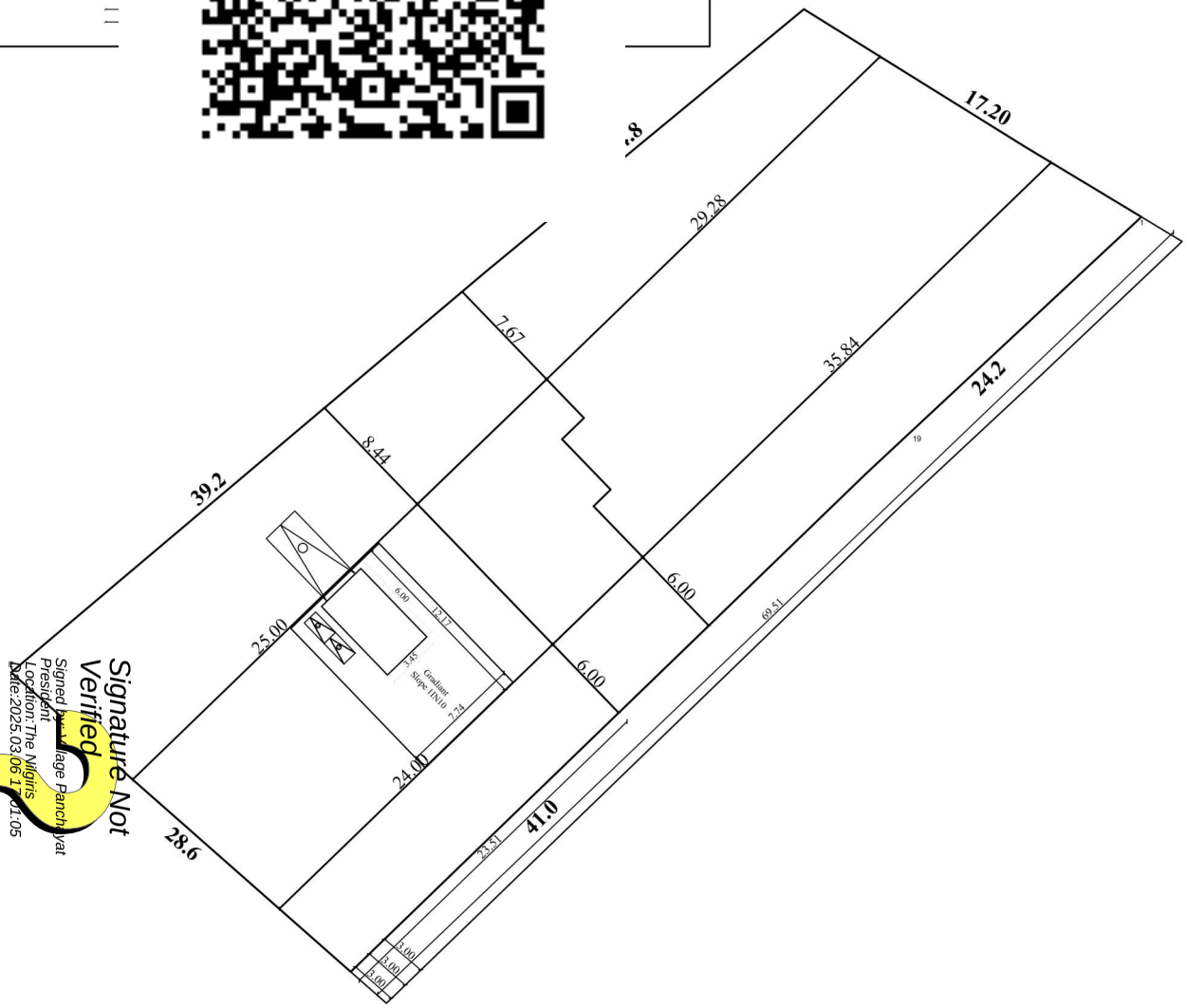


NOT TO SCALE:

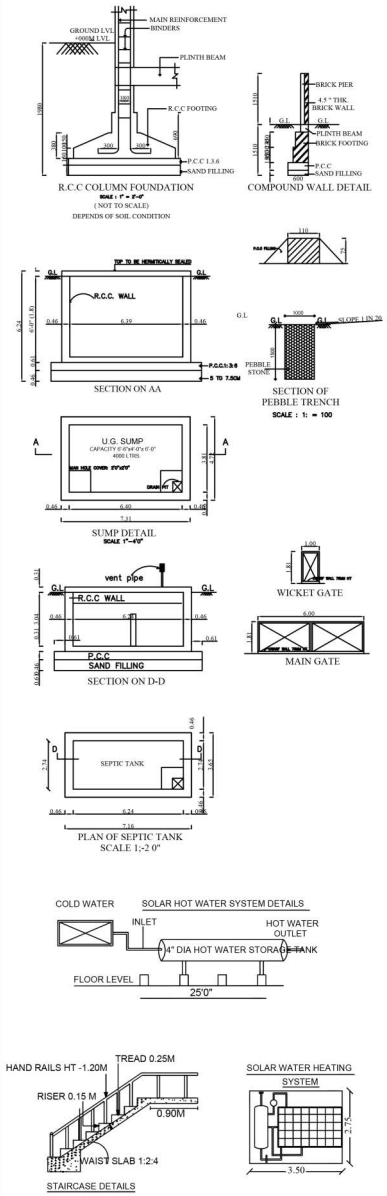


**SCHEDULE OF JOINERIES**

| REFERENCE | | IN METER |
|---|---|---|
| FD | MAIN DOOR | 1.22 X 2.10 |
| D1 | DOOR | 0.90 X 2.10 |
| D2 | DOOR | 0.75 X 2.10 |
| W | WINDOW | |
| W3 | WINDOW | 1.52 X 1.80 |
| KW | KITCHEN WINDOW | 1.22 X 1.20 |
| V | VENTILATOR | 0.60 X 0.60 |
| EX | EXHAUST FAN | |

| AREA OF CALCULATION | SQ.FT | SQ.M |
|---|---|---|
| AREA OF PLOT EXTENT (AS AT SITE) | 18,830 | 1750.00 |
| FMB/TSLR PLOT EXTENT | 18,830 | 1750.00 |
| AREA AS PER DOCUMENT | 18,830 | 1750.00 |
| SUPER IMPOSED PLOT BOUNDARY | 18,830 | 1750.00 |

**GROUND FLOOR DETAILS**

| | | |
|---|---|---|
| R.C.C BUILDING IN GROUND FLOOR | 1243.64 | 115.58 |
| BUILT UP AREA GROUND FLOOR | 1243.64 | 115.58 |
| GROUND FLOOR COVERED AREA | 1243.64 | 115.58 |
| GROUND FLOOR CARPET AREA | 1085.03 | 100.84 |
| PERCENTAGE OF SITE COVERAGE | - | 6.60% |
| FLOOR SPACE INDEX[NON PREMIUM] | - | 0.06 |

| No's Dewelling Units | Height of Building |
|---|---|
| - 1 | 4.45m |

PARKING DETAILS:

NO.OF OPEN CAR PARKING -1

NO.OF OPEN TWO WHEELER PARKING -2

COLOURS OF INDEX:

EXISTING ROAD SHOWN IN -
BOUNDARY SHOWN IN -
PRO.BUILDING SHOWN IN -
RAIN WATER COLLECTION TANK -

NAME OF THE OWNER:

Mr.KANNAN

S. Kannan

APPROVAL AUTHORITY (For office use only):

**REGISTERED ENGINEER SIGN**

JIES VARGHESE
REGISTERED ENGINEER
DTPC/NILGIRIS/RE/GR-III/24/06/007
Erumad, Konnachal-643239
Mobile - 9443699242

Signature Not Verified
Signed by Village Panchayat President
Location: The Nilgiris
Date: 2025.03.06 1[illegible]:01:05