PLAN SHOWING THE PROPOSED CONSTRUCTION R.C.C.ROOF GROUND FLOOR RESIDENTIAL BUILDING IN PLOT NO:92, OLD SF NO:94/1B,NEW SF NO:94/1B6,PATTA NO:2212, AT "JAM JAM NAGAR" KALLURANI VILLAGE, NAGARAGUDI PANCHAYAT , NORTH ILAYANGUDI GROUP,ILAYANGUDI TALUK & UNION ,SIVAGANGAI DISTRICT.

APPLICANT NAME : Mr.GANESAN S/O RETHINAM

APPROVED NO:541/2018 (DATED:02.09.2018)

N

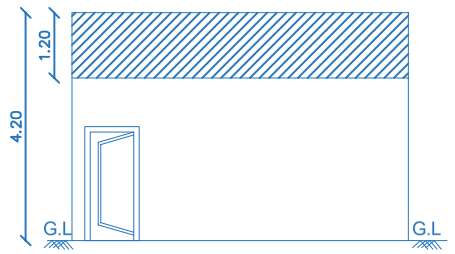

ELEVATION

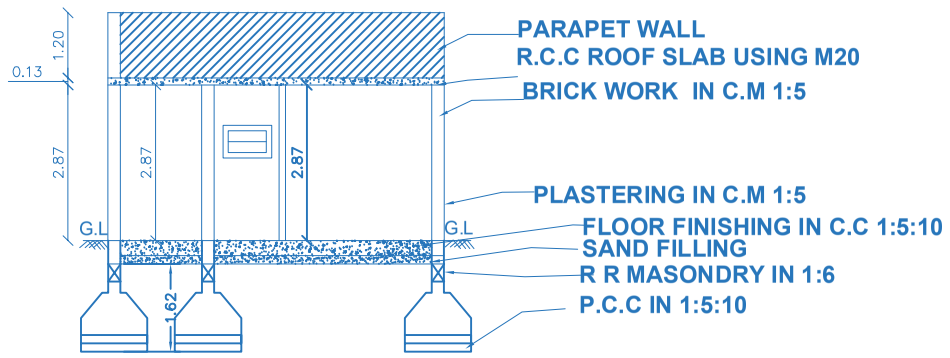

SECTION A-A

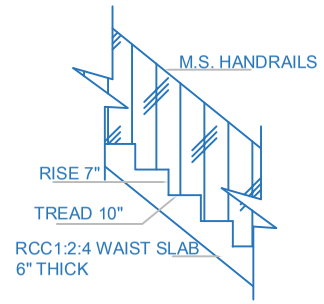

STAIRCASE DETAILS
SCALE- 1:20

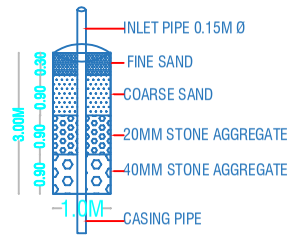

DETAILS OF RAIN WATER HARVESTING STRUCTURES

(NOT to SCALE)

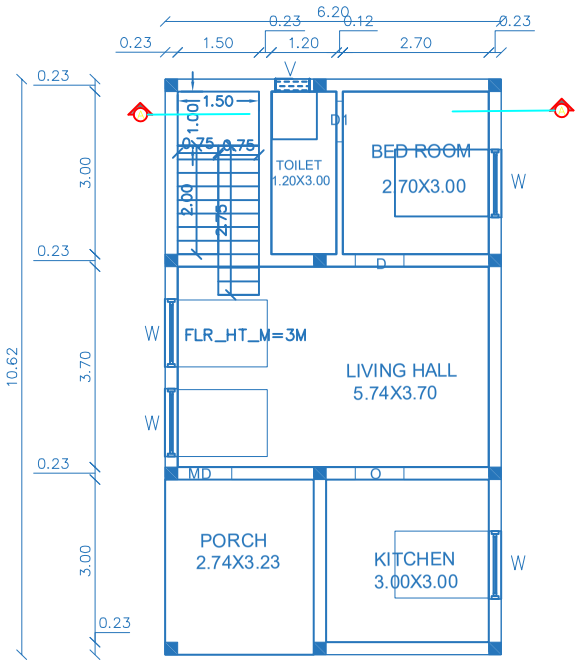

GROUND FLOOR

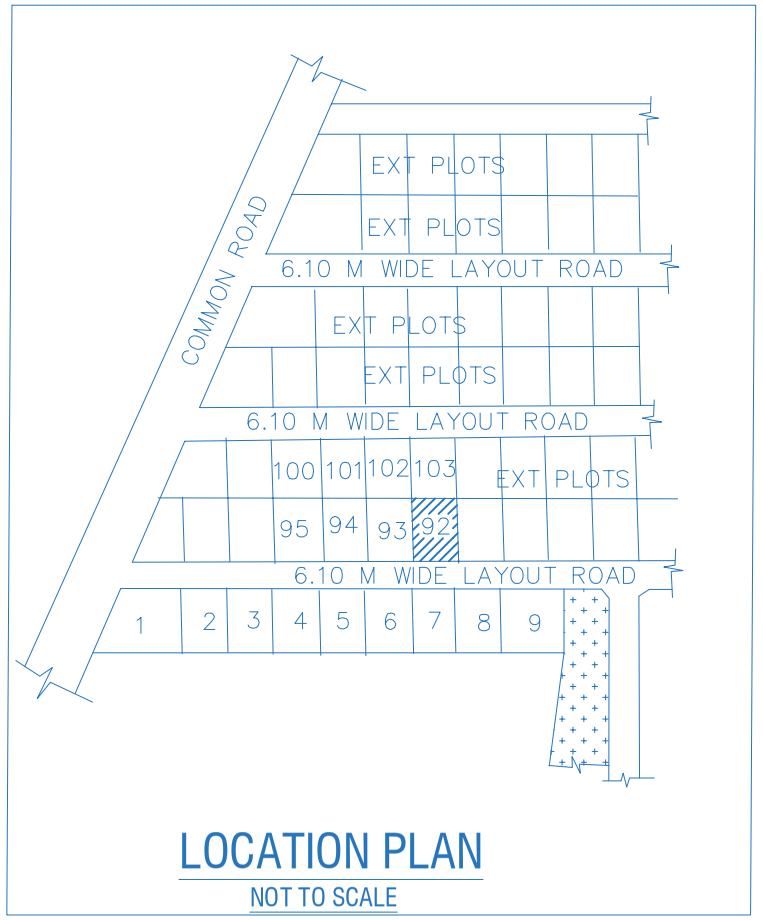

LOCATION PLAN
NOT TO SCALE

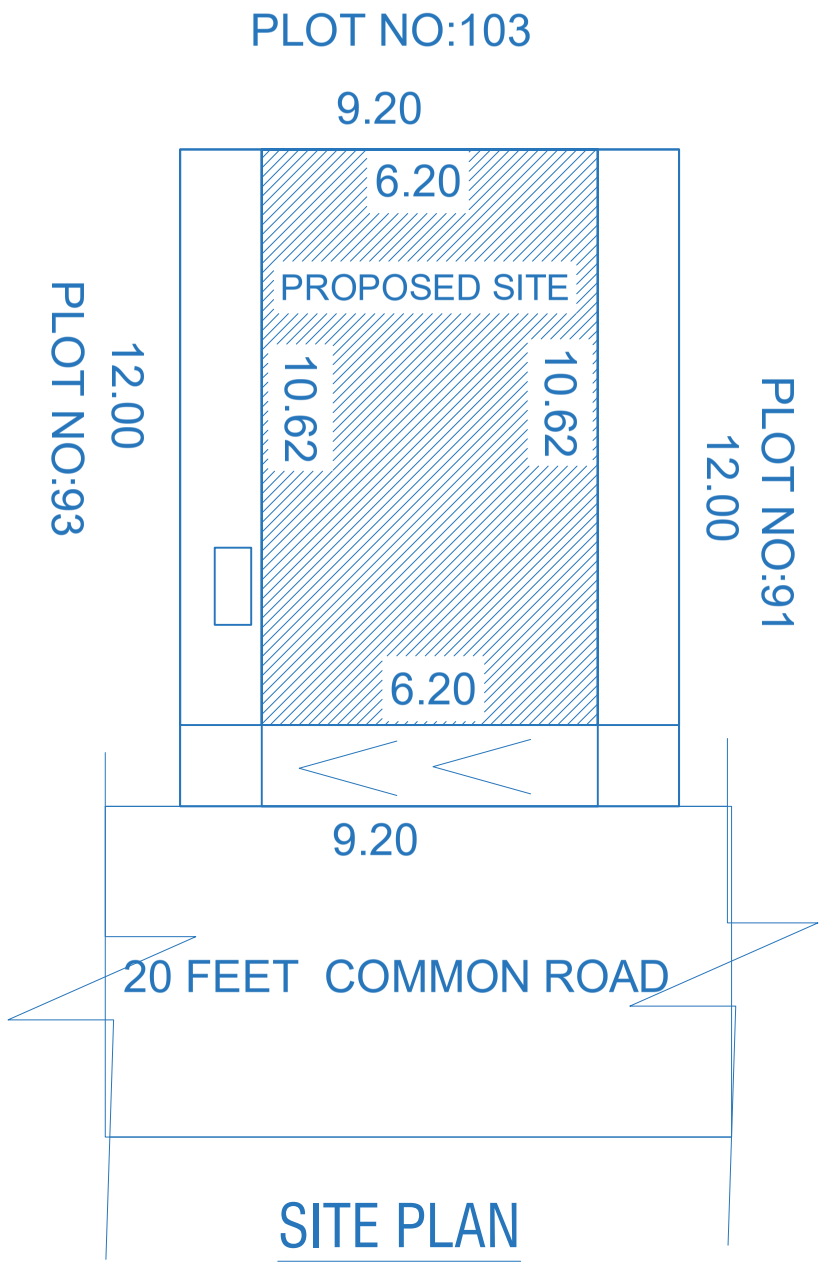

SITE PLAN
SCALE -1:100

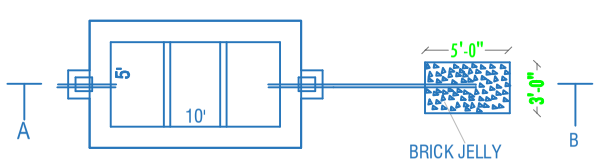

SEPTIC TANK & DISPERSION TRENCH DETAILS
SCALE- 1:100

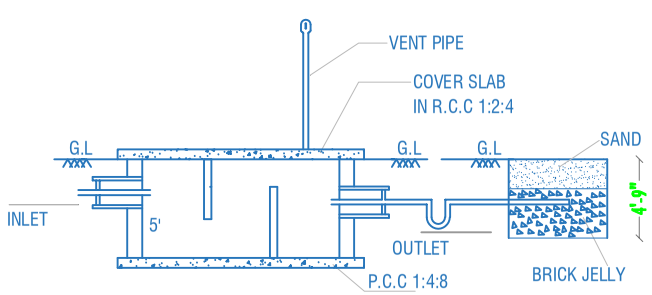

SECTION-AB

AREA DETAILS

PARTICULARS	Sq.Ft.	Sq.Mt.
TOTAL AREA OF THE SITE	1200.00	111.46
PLINTH AREA OF PRO. BLDG. - GF.	708.37	65.81
OPEN SPACE	491.63	45.65

FSI - 0.59 | PLOT COVERAGE - 59.04%

SCHEDULE OF JOINERIES

	DOORS			OPEN	
D	DOOR	0.90 X 2.10	O	OPEN	1.00 X 2.10
D	DOOR	0.90 X 2.10	AO	OPEN	1.55 X 2.10
D1	DOOR	0.90 X 2.10			
D2	DOOR	0.75 X 2.10			

	WINDOWS			VENTILATOR	
W	WINDOW	1.23X 1.23	V	VENTILATOR	0.90 X 0.60
RS	ROLLING SHUTTER	2.50 X 3.00			

COLOUR INDEX

SITE NO.

PROPOSED BLDG.

NOTES

1. ALL DOORS AND WINDOWS ARE OUTWARD OPENING.
2. WASTE WATER WILLBE USED FOR GARDEN PURPOSE.
3. ALL DIMENSIONS ARE IN FEET AND METRES.

APPLICANT

Mr.GANESAN S/O RETHINAM

ENGINEER

OFFICE USE ONLY

Signature Not Verified
Signed by Village Panchayat President
Location: Sivagangai
Date: 2024.05.20 11:01:27