PLAN SHOWING THE PROPOSED CONSTRUCTION OF R.C.C. ROOF GROUND FLOOR RESIDENTIAL BUILDING IN R.S NO: 280 / 4B25, PLOTNO: 501 AT VRUKSHA GARDEN, SAKKANTHI VILLAGE & PANCHAYAT, SIVAGANGAI TALUK & DIST.

SCALE 1:100

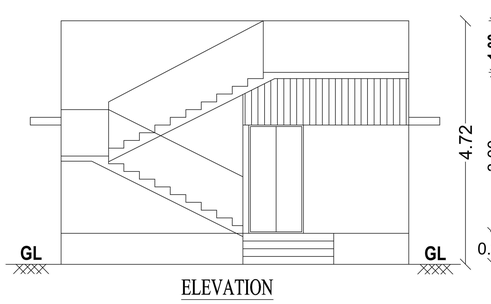

ELEVATION

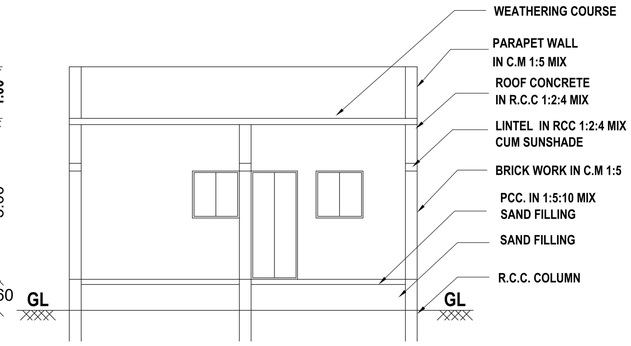

SECTION ON 'AA'

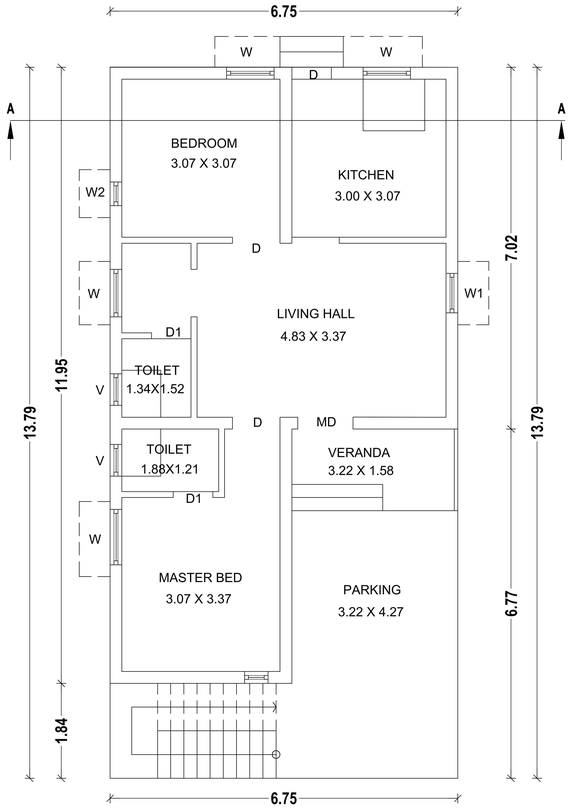

GROUND FLOOR PLAN

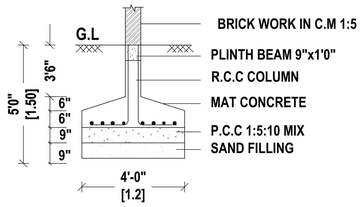

COLUMN FOUNDATION

(NOT TO SCALE)

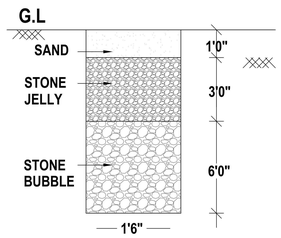

RAIN WATER HARVEST PIT

(RWHP)

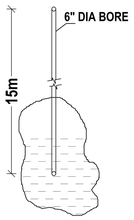

BORE WELL

(NOT TO SCALE)

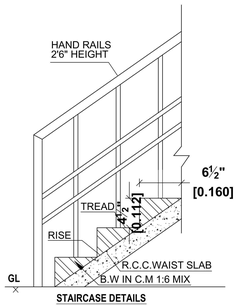

STAIRCASE DETAILS

(SCALE - 1:20)

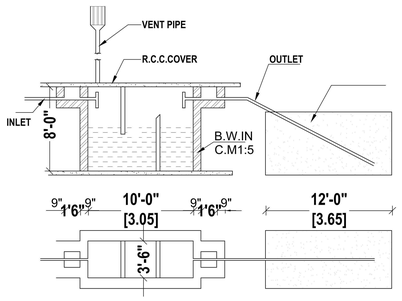

SEPTIC TANK & D-TRENCH DETAILS

(NOT TO SCALE)

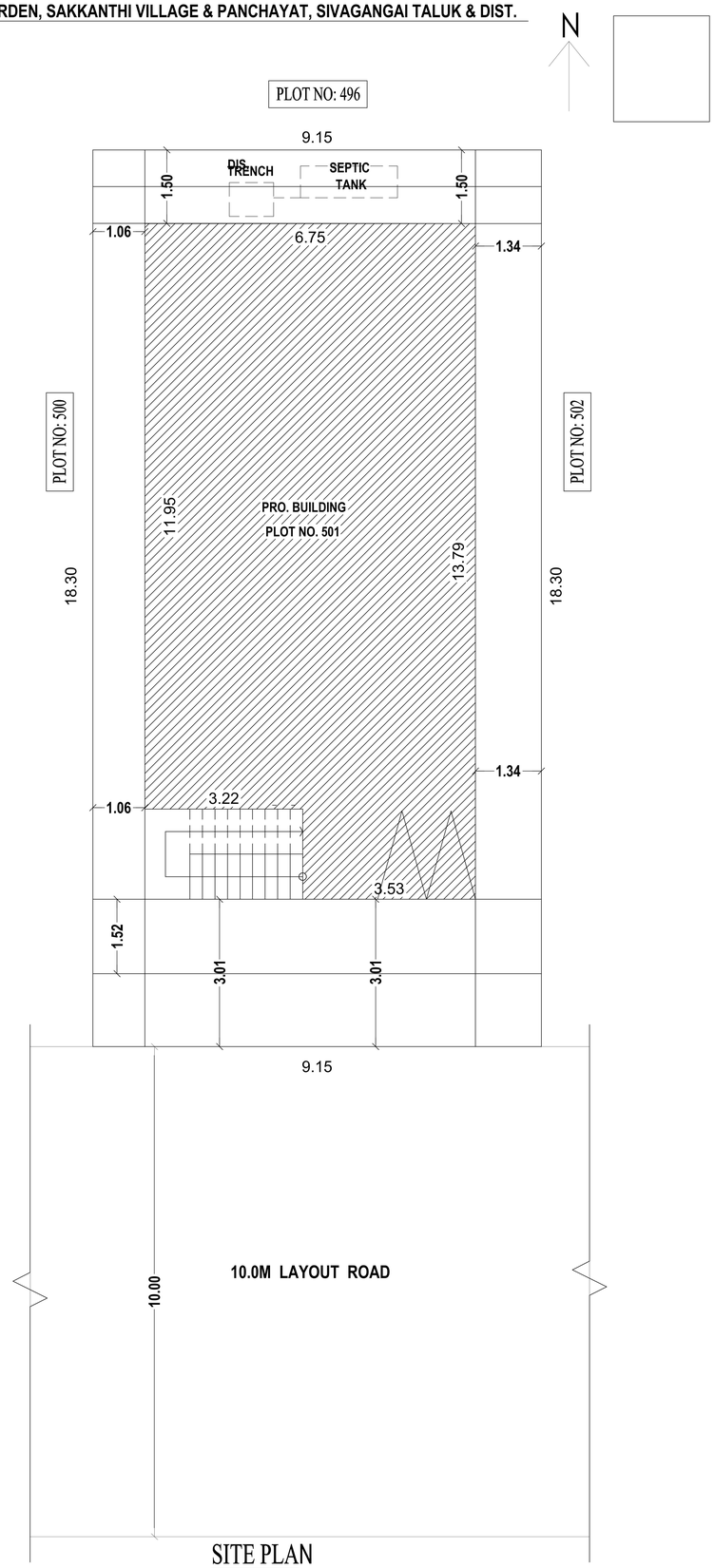

SITE PLAN

SCALE = 1:100

SCHEDULE OF JOINERIES

MD	-	MAIN DOOR	- 1.07 X 2.10M
D	-	DOOR	- 0.91 X 2.10M
D1	-	DOOR	- 0.76 X 2.10M
W	-	WINDOW	- 1.20 X 1.20M
W1	-	WINDOW	- 0.91 X 1.20M
V	-	VENTILATOR	- 0.91 X 0.91M

AREA DETAILS	AREA IN SQ.M
AREA OF SITE	167.22
AREA OF GROUND FLOOR	83.86
AREA OF OPEN SPACE	83.86

REFERENCE

PROPOSED SITE

PROPOSED BUILDING

EXISTING ROAD

APPLICANT

ENGINEER

T. SIVARAMAKRISHNAN, DCE.,
Reg. No: TJR / RE-III / 2019 / 0127
Shalom Cadd,Woriyur, Trichy
Cell: 99446 45477