PLAN SHOWING THE PROPOSED CONSTRUCTION OF PROPOSED GROUND FLOOR FOR COMMERCIAL PURPOSE IN OLD S.F.NO: 535/1, NEW S.F.NO: 53-8100, PLOT NO:1-4(EAST PART), PATTA NO:3451, AT SRIRAM NAGAR, ARUL DEVANNAGOUNDANUR VILLAGE, PANCHAYAT, SANKARI TALUK, SALEM DISTRICT.

APPLICANT: THIRUVALLOS ANATHANS/o THIRUMADHESAN

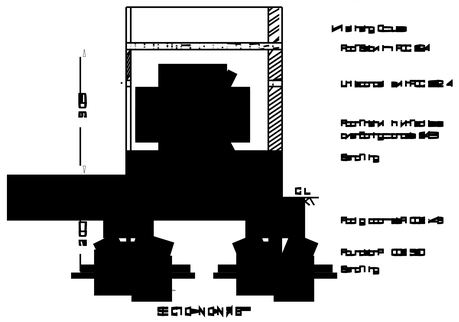

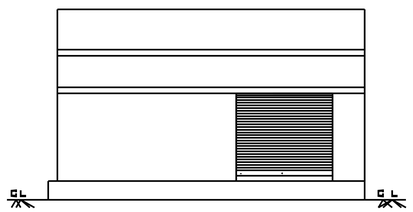

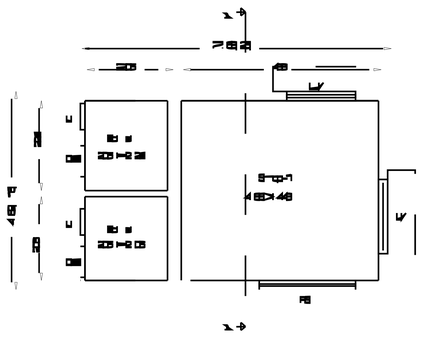

GROUND FLOOR PLAN

SCALE = 1:100

SITE PLAN

SCALE = 1:100

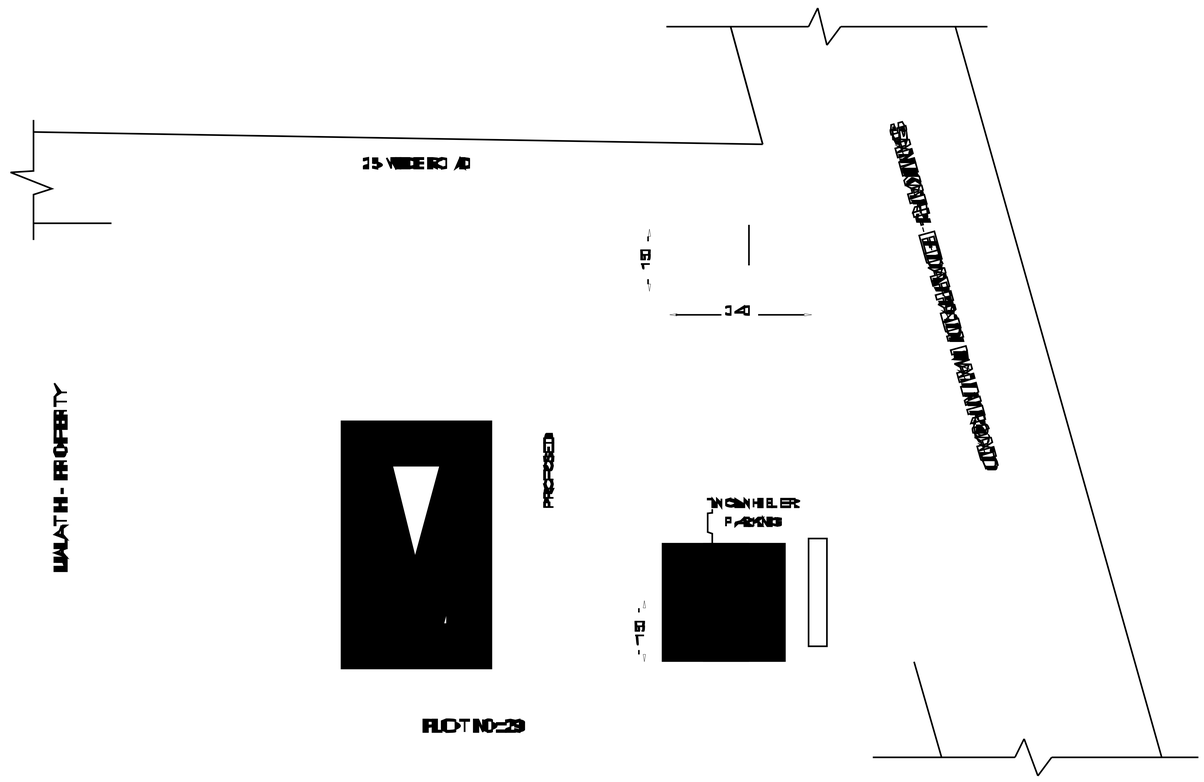

OFFICE USE:

FLOOR WISE BREAK UP

Typical Block Name	Floor Name	Total Built up		Carpet Area
		Sq.Ft.	Sq.Mt.	
Commercial	Floor-Ground	400.00	37.16	30.40
	Total	400.00	37.16	30.40

SCHEDULE OF JOINERIES

DESCRIPTION	SIZE IN FEET	SIZE IN MT
Rolling Shutter	8'0" x 8'0"	2.44 x 2.44
Window	5'0" x 4'0"	1.50 x 1.37

PARKING DETAILS

Parking Category	Dwelling Units	Cars Required	Cars Provided	Two Wheelers	
				Req.	Pro.
Commercial Purpose	–	1	1	1	2
Visitors Parking 10%	–	-	-	-	-

LEGEND

DOCUMENT AREA	214.50	199.30
SUPERIMPOSED AREA	214.50	199.30
PLOT COVERAGE	18.6%	

FLOOR SPACE INDEX = Total Built up Area / Total Land Area = 37.16 / 199.30 = 0.18 < 2

DETAILS OF SEPTIC TANK WITH SOAKPIT

SCALE 1:100

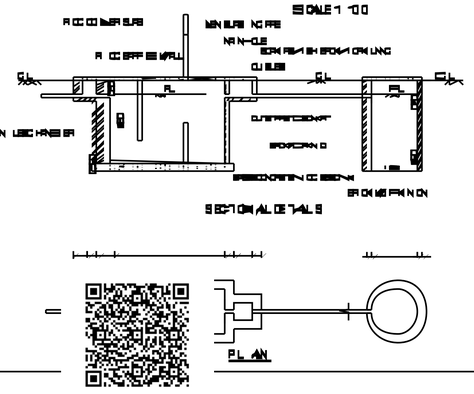

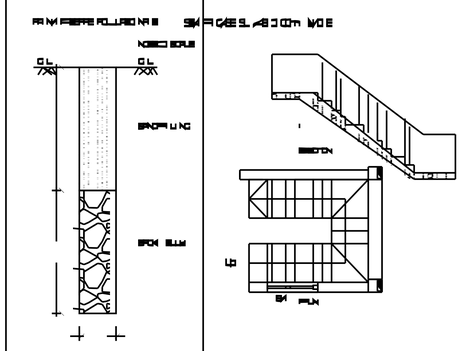

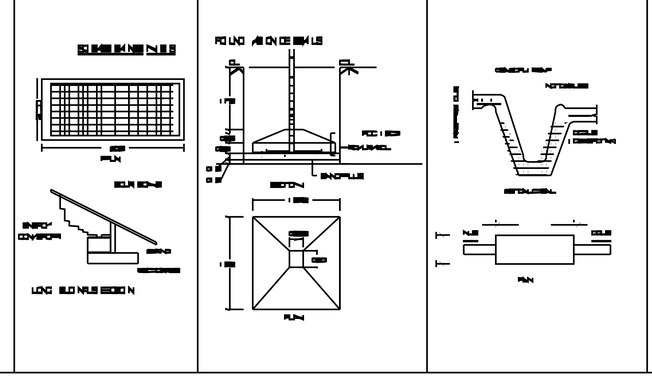

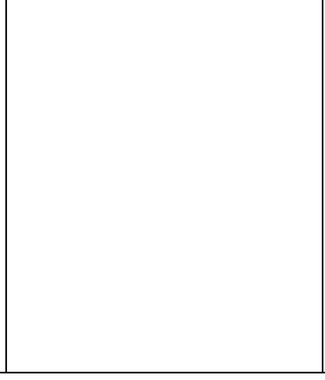

Signature Not Verified
Digitally signed by Prabhakaran Provident
Date: 2025.07.22 12:17:06 IST