PLAN SHOWING THE PROPOSED CONSTRUCTION OF RCC ROOF COMMERCIAL BUILDING IN OLD S.NO.77/7A, NEW S.NO.77/7A3,PATTA NO.1629,THIRUMALAIGIRI VILLAGE,THIRUMALAIGIRI PANCHAYAT, SALEM PANCHAYAT UNION,SALEM WEST TALUK,SALEM DISTRICT.

APPLICANT: Mr.P.PRAKASH.,S/O.Mr.RAJA@PERUMAL(LATE).,

REFERENCE		MT	FT
RS	ROLLING SHUTTER	1.83 X 2.44	6'0" X 8'0"
D1	DOOR	0.76 X 2.13	2'6" X 7'0"
W	WINDOW	1.22 X 1.22	4'0" X 4'0"
V	VENTILATOR	1.22 X 0.61	4'0" X 2'0"

AREA DETAILS	SQFT	SQMT
AREA OF THE SITE(DOC)	1199.00	111.38
AREA OF THE PRO.G.F Building	531.09	49.34
Total Area	531.09	49.34
AREA OF OPEN SPACE	667.91	62.04

ALL DIMENSIONS ARE IN 'M'
SCALE 1" - 8'0"[1:100]

BOUNDRY SHOWN IN
EXISTING SHOWN IN
PROPOSED SHOWN IN

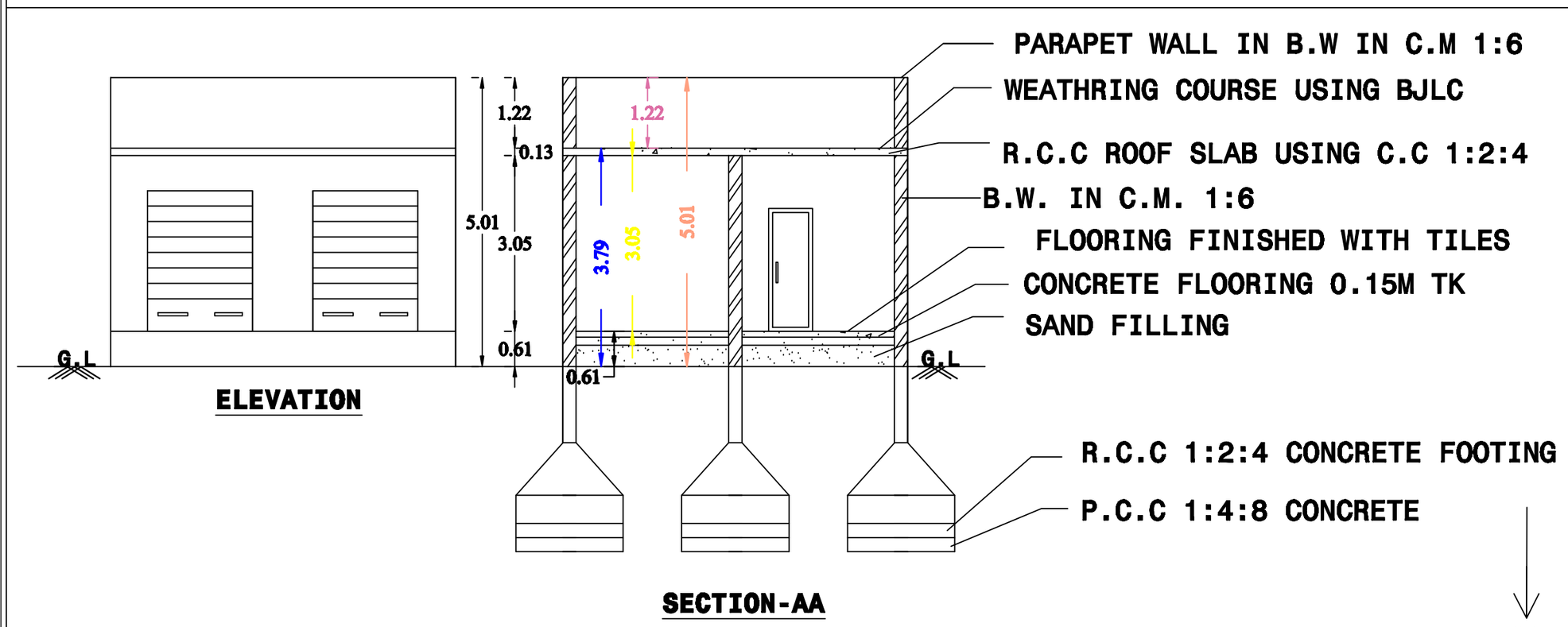

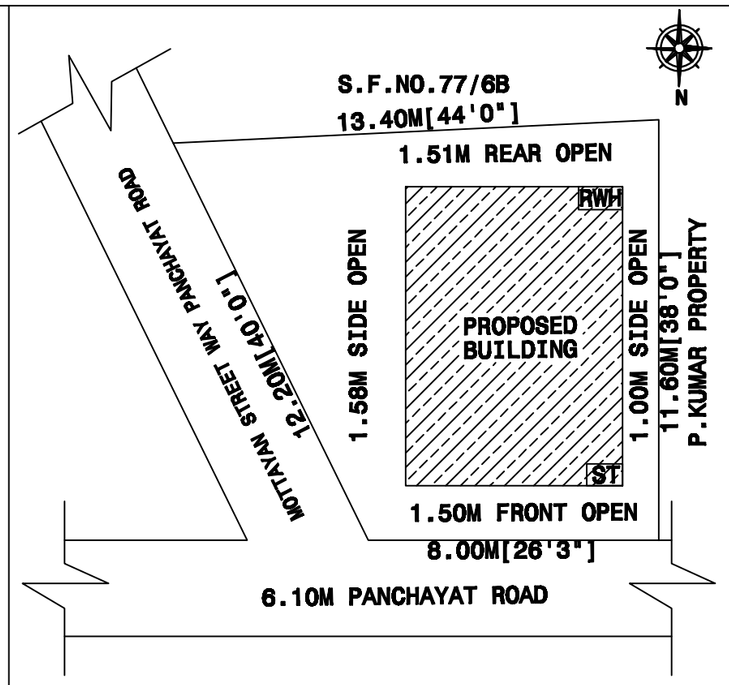

SITE PLAN
SCALE:1:200

APPLICANT

ENGINEER

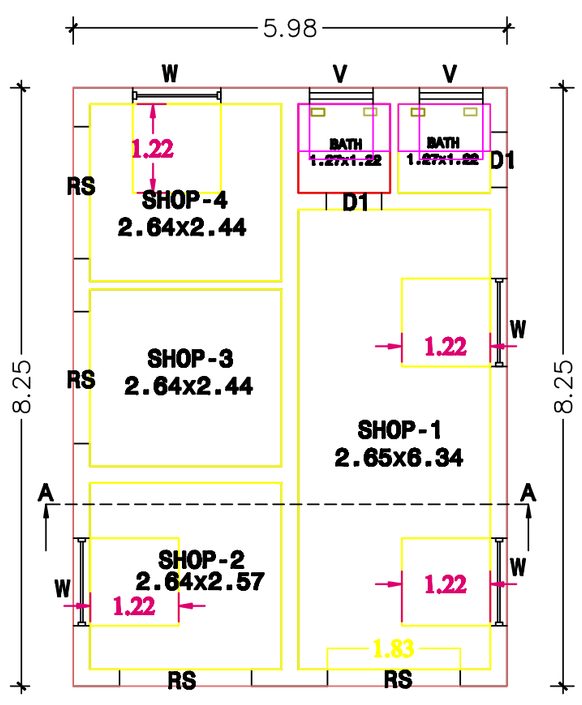

GROUND FLOOR PLAN

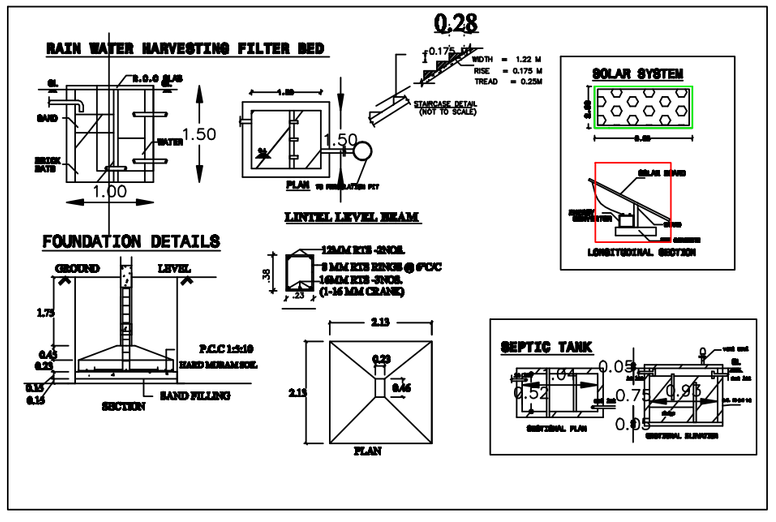

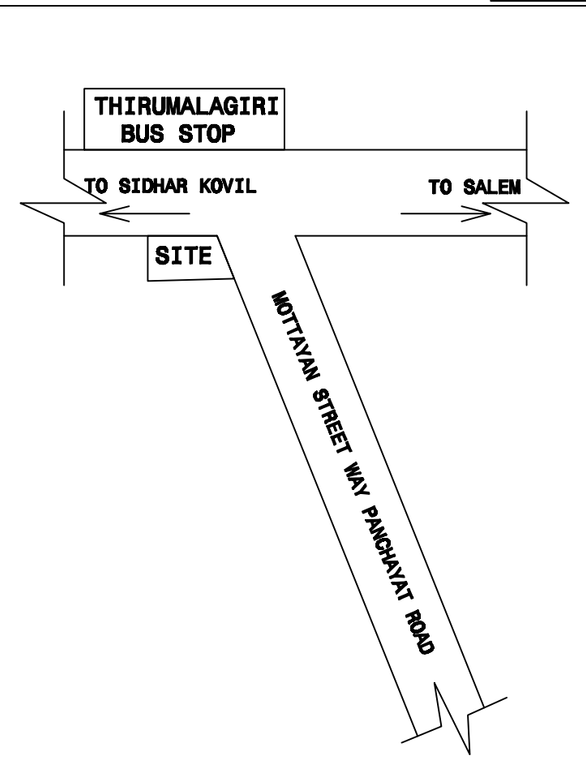

KEY PLAN
[NOT TO SCALE]

Er. M. PRADEEP, B.E
EXCELLENT PLANNERS
2/106, NADAR STREET,
MARAMANGALATHU PATTI,
SALEM-30 Cell: 95240 4237
LBS no: 236

Signature Not Verified
Signed by Lakshmi Panchayat President
Location: Salem
Date: 2024.05.14 17:27:23