PLAN SHOWING THE PROPOSED CONSTRUCTION OF R.C.C ROOF GROUND FLOOR & FIRST FLOOR BUILDING FOR RESIDENTIAL PURPOSE IN R.S.F.NO: 36/ 2Y1A, NOW NEW SUB DIVISION R.S.F.NO: 36/ 2Y1A2, PATTA NO: 2584, AT AMANI KONDALAMPATTI VILLAGE & PANCHAYAT, PANAMARATHUPATTI PANCHAYAT UNION, SALEM SOUTH TALUK, SALEM DISTRICT.

APPLICANT : Mr.S. BALAKRISHNAN,
S/O SEVAGOUNDAR.

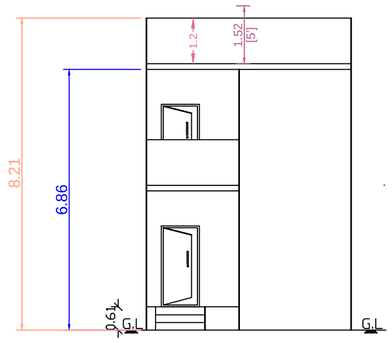

ELEVATION

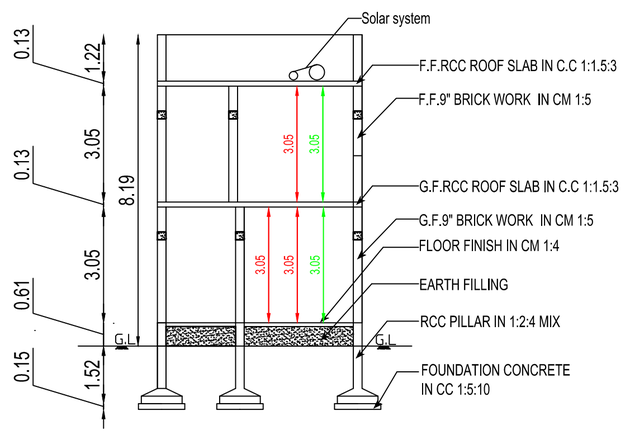

SECTION -AA

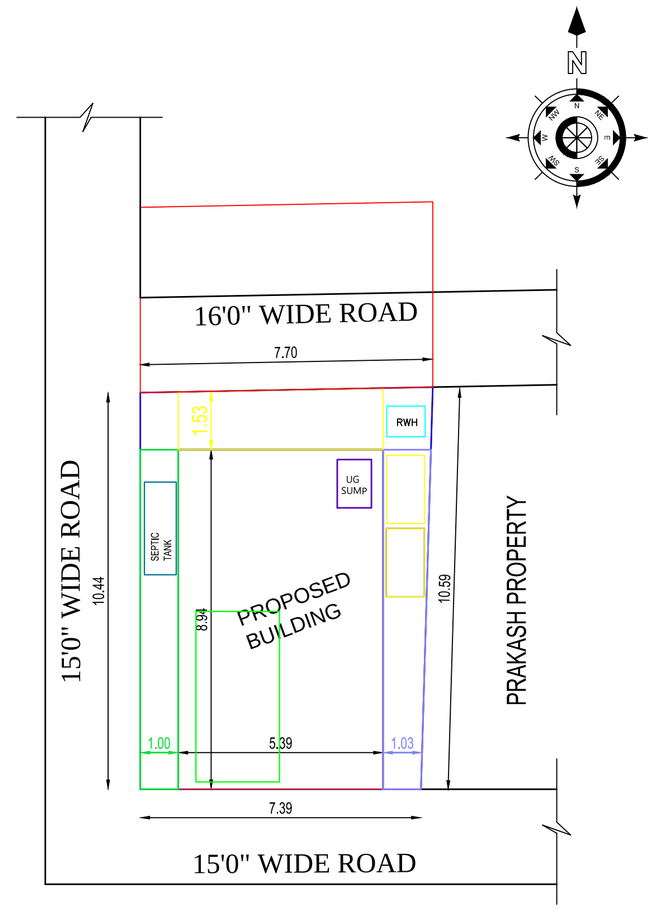

SITE PLAN
(Scale : 1:100)

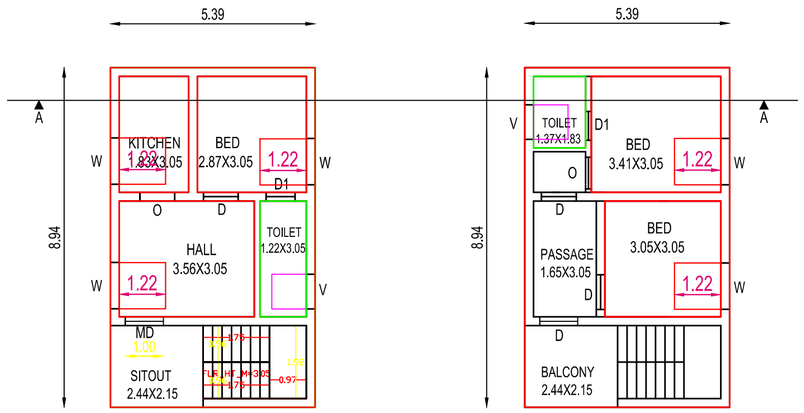

GROUND FLOOR PLAN
(Scale 1:100)

FIRST FLOOR PLAN
(Scale 1:100)

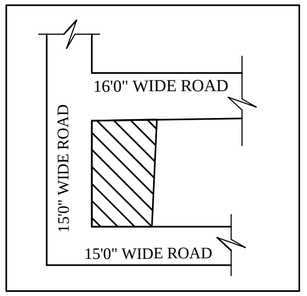

KEY PLAN

PL
PL
AS
SIN
CR
SE
WH
DIS
TA
JUI
SU
PA
AC
RO
RO
AV
AVG_PLOT_DEPTH= 10.59
LAND_USE_ZONE =INDIVIDUAL RESIDENCE
RWH_DECLARED=YES
BUILDING_NEAR_TO_RIVER=NO
AREA_TYPE=OTHERS
BUILDING_NEAR_MONUMENT=NO
BUILDING_NEAR_GOVT_BLDG=NO
NOC_FOR_CONSTRUCTION_NEAR_MONUMENT=NO
NOC_FIRE_DEPT=NO
OSR_APPLICABLE=NO
OSR_SURRENDER=NO
OSR_SURR_BUYBACK_RETAIN=BUYBACK
PREMIUM_FSI_REQUIRED=NO
IS_APPROVED_LAYOUT=NO
IS_SWIMMING_POOL_EXISTS=NO
IF_HERITAGE_TOWN_LESSTHAN_1KM_RADIUS=NO
FMB_OR_PLR = 79.30
AS_AT_SITE = 79.30

=NO

AYAT

AREA DETAILS	SQ.FT	SQ.MT
APPLICANT SITE AREA AS ON DOCUMENT	853.50	79.32
APPLICANT SITE AREA AS ON FMB PATTA	853.50	79.32
APPLICANT SITE AREA AS ON SUPER IMPOSED PLOT BOUNDARY	853.50	79.32
PLINTH AREA OF PROPOSED RCC ROOF BUILDING IN G.F.	518.52	48.19
PLINTH AREA OF PROPOSED RCC ROOF BUILDING IN F.F.	518.52	48.19
TOTAL CARPET AREA IN G.F. & F.F	604.06	56.14
OPEN SPACE AREA	334.98	31.13
PRO. SEPTIC TANK & SOAK PIT - EACH	1 NO	
PRO. STAIR CASE	1 NO	
PRO. RAIN WATER HARVESTING SUMP	1 NO	

PLOT COVERAGE = 48.19 / 79.32 X 100 = 60.75%

F.S.I = 96.38 / 79.32 = 1.215

JOINERY DETAILS	FEET	METRE	JOINERY DETAILS	FEET	METRE
D - DOOR	4'0" X 7'0"	1.22 X 2.13	V - VENTILATOR	2'6" X 4'0"	0.76 X 1.22
D1 - DOOR	2'6" X 7'0"	0.76 X 2.13	V1 - VENTILATOR	2'6" X 2'6"	0.76 X 0.76
W - WINDOW	4'0" X 4'0"	1.22 X 1.22	RS - ROLLING SHUTTER	8'0" X 7'0"	2.43 X 2.13

Er. S.Prabhukumar,B.E, Cell : 98427 - 72750
Consulting Civil Engineer 94885 - 72750
E - mail id: svbprabhukumar@gmail.com Office : 82824 - 17175

SRIVEERMATHIPLANNERS
Engineer & Contractor

Office : 60 E, Varnapuram 5th Street, Murugan Kovil Opp 1st Floor,Bhavani - 638301
Resi : 153D/10, Varnapuram 5th Street, Anna Nagar, Bhavani - 638301

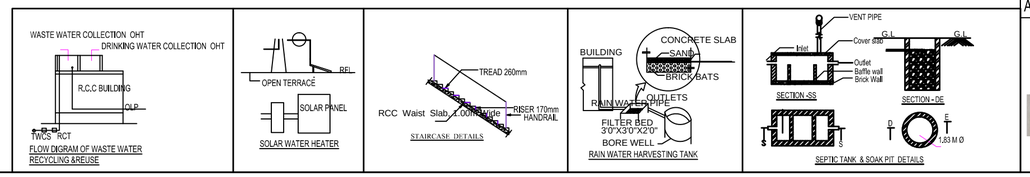

APPLICANT

ENGINEER

Er.S.PRABHUKUMAR,B.E.,
Registered Engineer - Grade II
Registration No:555/LS/2019/00005
Sri Veeramathi Planners,
Varnapuram 5th Street,
Opp. Murugan Kovil, 1St Floor, Bhavani
Cell: 98427 72750

Signature Not Verified
Signed by Village Panchayat President
Location:Salem
Date:2024.06.17 18:04:23