PLAN SHOWING DETAILS OF THE PROPOSED CONSTRUCTION OF R.C.C ROOF GROUND FLOOR RESIDENTIAL BUILDING IN NEW R.S.F NO- 26/1E1A1B, SRI BALAMURUGAN NAGAR, PLOT NO- 15, SENAIPALAYAM VILLAGE AND SENAIPALAYAM VILLAGE PANCHAYAT, VEERAPANDI UNION, SALEM SOUTH TALUK, SALEM DISTRICT.

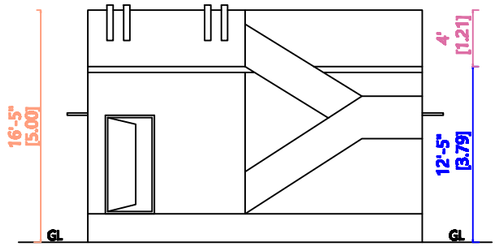

FRONT ELEVATION
(NORTH SIDE VIEW)

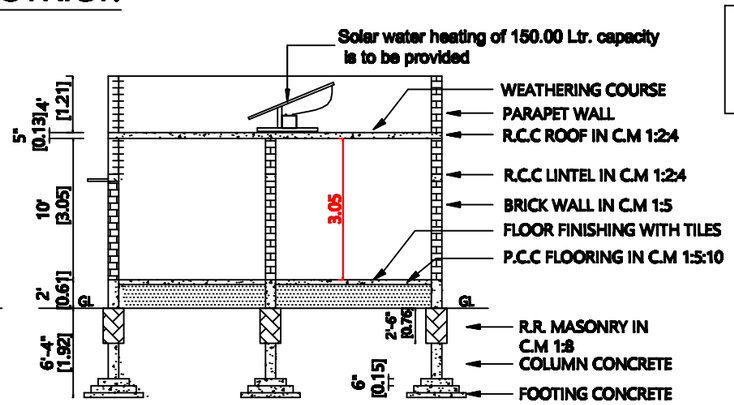

CROSS SECTION "AB"

DTCP APPROVED
REGULARISED LAYOUT - SALEM

FILE NO - 3370/2018 DATE - 18/09/2018
LAYOUT APPROVAL NO - 742/2018

PLAN INFO
PLOT_AREA_M2= 120.62
AS_PER_DOCUMENT = 117.70
SINGLE_FAMILY_BLDG= YES
CRZ=NO
SECURITY_ZONE=NO
WHETHER_GOVT_OR_AIDED_SCHOOL=NO
DISTRICT= SALEM
TALUK= SALEM SOUTH
JURISDICTION_TYPE= RURAL PANCHAYAT
SURVEY_NO= 26/1E1A1B
PATTA_NO=666
PLOT_NO= 15
ACCESS_WIDTH_M=10.00
ROAD_WIDTH=7.01
ROAD_LENGTH=273.00
AVG_PLOT_WIDTH= 9.10
AVG_PLOT_DEPTH= 12.70
LAND_USE_ZONE =INDIVIDUAL RESIDENCE
RWH_DECLARED=YES
BUILDING_NEAR_TO_RIVER=NO
AREA_TYPE=OTHERS
BUILDING_NEAR_MONUMENT=NO
BUILDING_NEAR_GOVT_BLDG=NO
NOC_FOR_CONSTRUCTION_NEAR_MONUMENT=NO
NOC_FIRE_DEPT=NO
OSR_APPLICABLE=NO
OSR_SURRENDER=NO
OSR_SURR_BUYBACK_RETAIN=BUYBACK
PREMIUM_FSI_REQUIRED=NO
IS_APPROVED_LAYOUT=YES
IS_SWIMMING_POOL_EXISTS=NO
IF_HERITAGE_TOWN_LESSTHAN_1KM_RADIUS=NO
FMB_OR_PLR = 120.11
AS_AT_SITE = 120.62

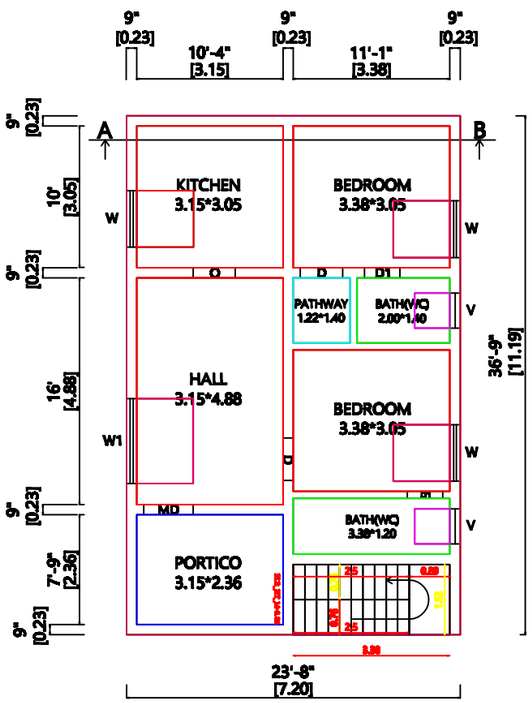

PROPOSED GROUND
FLOOR PLAN

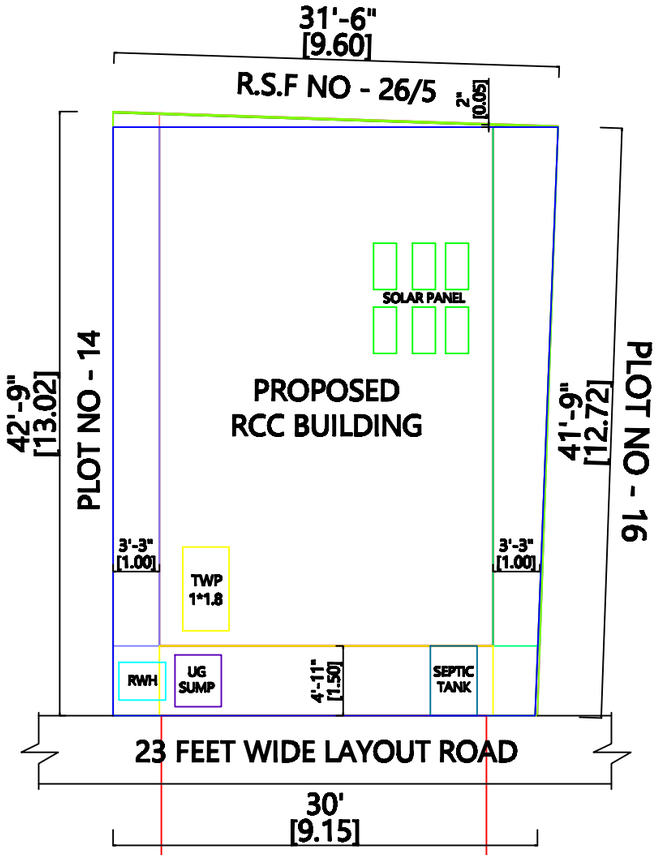

SITE PLAN (1:100)

Signature Not Verified
Signed by Village Panchayat President
Location:Salem
Date:2024.05.23 18:49:43

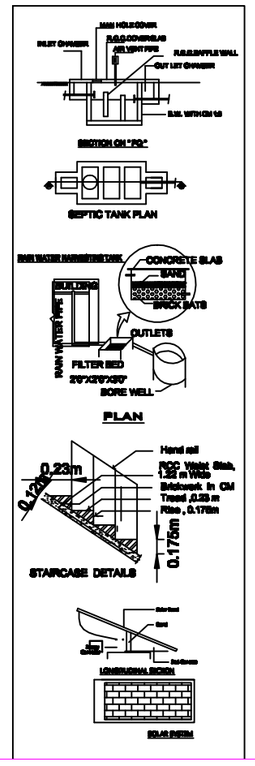

TOPO PLAN
200m RADIUS

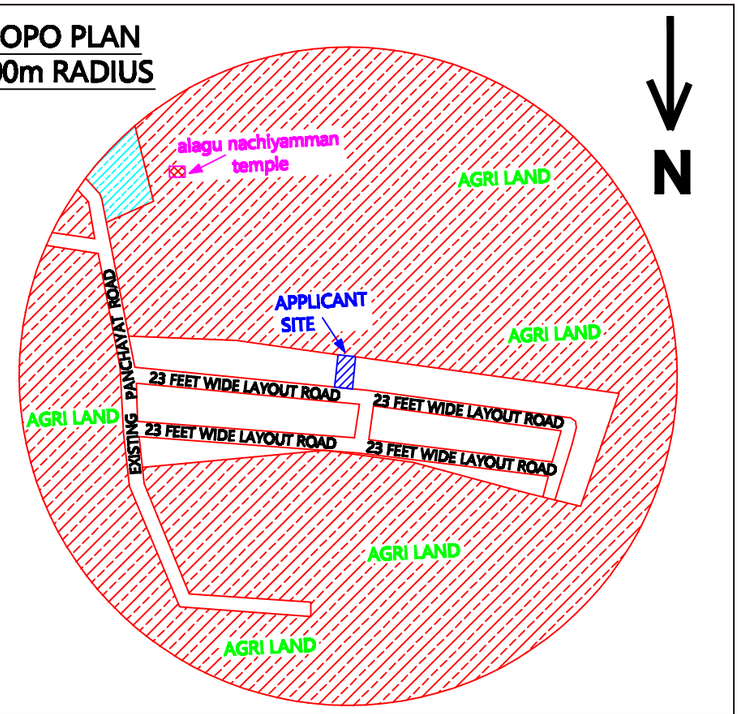

APPLICANT:

Mrs M. JOSEPHINE ADAIKALA RANI
W/O D. NAGARAJAN

AREA DETAILS	SQ.M	SQ.FT
APPLICANT SITE (DOC NO - 3830/2020)	117.70	1267.00
APPLICANT SITE AS PER PATTA	118.00	1270.00
APPLICANT SITE AS PER FIELD	120.62	1298.25
PLINTH AREA OF GROUND FLOOR BUILDING	80.57	867.25
CARPET AREA OF GROUND FLOOR BUILDING	35.95	387.00
OPEN AREA	37.13	399.75

JOINERY DETAILS	FEET	METER	JOINERY DETAILS	FEET	METER
MD - MAIN DOOR	3'6" X 7'0"	1.07 X 2.13	W - WINDOW	4'0" X 4'0"	1.22 X 1.22
D - DOOR	3'0" X 7'0"	0.90 X 2.13	W1 - WINDOW	6'0" X 4'0"	1.83 X 1.22
D1 - DOOR	2'6" X 7'0"	0.76 X 2.13	V - VENTILATOR	2'6" X 2'6"	0.76 X 0.76
O - OPEN	3'0" X 7'0"	0.91 X 2.13			

Er P.DINESHKUMAR B.E. CIVIL
REGISTERED ENGINEER (RE-GRADE-II-050/LS2019/00009)

APPLICANT	ENGINEER
m.Josphine Adaikala Rani	Er. P. DINESHKUMAR B.E., Civil REGISTERED ENGINEER RE - GRADE II - 050/LS/2019/00009 45/35, KUMARARAJA BUILDING NEAR NEW SUB REGISTER OFFICE B.KOMARAPALAYAM - 638 183 PH : 97887 28730, 90804 71144