## ABSTRACT

Septage Management – Provisions regarding removal of septage from unsewered areas, prevent illegal discharge of sewage, protection of water bodies in Local Bodies- Septage Management Regulation and Operative Guidelines – Approved – Orders issued.

---

**MUNICIPAL ADMINISTRATION AND WATER SUPPLY (MW) DEPARTMENT**

**G.O.(Ms)No.1** **Dated: 02.01.2023**

சுபகிருது – மார்கழி – 18

திருவள்ளுவர் ஆண்டு, 2053

**Read :**

1 G.O.(D)No.106, Municipal Administration and Water Supply (MA-3) Department, dated: 01.09.2014.
2 Orders of NGT (SZ) in O.A.No.48/2020 (SZ) dated 18.02.2021.
3 Orders of the NGT (SZ) in O.A.No.168/2020 (SZ) with O.A.No.25/2021(SZ) with O.A.No.140/2021 (SZ), dated 23.11.2021 and 17.12.2021.
4 From the Managing Director, Chennai Metropolitan Water Supply and Sewerage Board Lr.No.CMWSSB/CE(O&M)-II/STP(S)/Decanting/2020-2021, dated 12.06.2021.
5 From the Managing Director, Chennai Metropolitan Water Supply and Sewerage Board Letter No.CMWSSB/CE(O&M)-II/STP(S)/Decanting/ 2021-2022, dated 12.01.2022.
6 The Tamil Nadu Municipal Laws and the Chennai Metropolitan Water Supply and Sewerage (Amendment) Act, 2022 (Tamil Nadu Act 34 of 2022)
7 G.O.(Ms).No.182, Municipal Administration and Water Supply (MA-3) Department, dated: 31.12.2022.
8 G.O.(Ms).No.183, Municipal Administration and Water Supply (MA-3) Department, dated: 31.12.2022.
9 Tamil Nadu Government Gazette Extraordinary, No.578 dated 31.12.2022.
10 Tamil Nadu Government Gazette Extraordinary, No.579 dated 31.12.2022.

.....

**ORDER:**

In the Government Order first read above, Operative Guidelines for Septage Management in Urban and Rural Local Bodies in Tamil Nadu have been issued.

**2.** In the letter fourth read above, the Managing Director, Chennai Metropolitan Water Supply and Sewerage Board has stated that frequent complaints regarding illegal discharge of sewerage in public places, which extend to areas beyond the limits of Greater Chennai Corporation are being received.

**3.** The National Green Tribunal (Southern Zone) had taken up a suomoto case [NGT (SZ) OA No.48/2020] based on newspaper report regarding illegal

p.t.o

Verified by RealEstate

discharge by sewer lorries. The National Green Tribunal (Southern Zone) disposed of the case on 18.02.2021, vide the orders second read above with the following recommendations of the Joint Committee constituted by National Green Tribunal, to the Chennai Metropolitan Water Supply and Sewerage Board:

- The Chennai Metropolitan Water Supply and Sewerage Board shall expedite the process of establishment of underground sewer lines with Sewage Treatment Plant to handle the sewage generated from the Sholinganallur area.
- The Chennai Metropolitan Water Supply and Sewerage Board shall regulate the sewage tanker lorries operating in their jurisdiction by properly registering them and streamlining the sewage tanker lorries in co-ordination with the Greater Chennai Corporation, the Public Works Department and the Tamil Nadu Pollution Control Board.

**4.** Further, the Hon'ble National Green Tribunal (Southern Zone) vide the orders second read above has issued the following direction:-

> "The concerned authorities mentioned in the report are directed to strictly implement the recommendations made by the committee in this regard. The Greater Chennai Corporation as well as Chennai Metropolitan Water Supply and Sewerage Board are directed to maintain a register of vehicles which are entrusted with the collection of garbage and sewage with GPS installed in those vehicles so as to track their movement to find out whether the garbage/sewage entrusted to them are reaching the proper disposal facility centre".

**5.** In the letter fifth read above, the Managing Director, Chennai Metropolitan Water Supply and Sewerage Board has stated that the issue of regulation of sewer lorries engaged in septage management could not be unilaterally addressed by the Chennai Metropolitan Water Supply and Sewerage Board, since monitoring and controlling involves many agencies and has therefore requested the Government to issue comprehensive regulation with necessary operative guidelines regarding removal of septage from unsewered areas, regulation of sewer tanker lorries operating in the local bodies and prevention of illegal discharge of sewerage, thereby protecting water bodies.

**6.** In the above circumstances, it has become imperative to revise the guidelines, to have a holistic approach on regulating the issues relating to sewerage removal, illegal discharge, etc. in areas which are not connected to sewage treatment plants through underground sewerage system. The Managing Director, Chennai Metropolitan Water Supply and Sewerage Board has therefore furnished the draft guidelines for septage management as recommended by the Committee constituted in Government letter dated 15.09.2021 for this purpose.

**7.** In the meantime, the Tamil Nadu Municipal Laws and the Chennai Metropolitan Water Supply and Sewerage (Amendment) Act, 2022 (Tamil Nadu Act 34 of 2022) has been enacted to amend the laws relating to Municipal Corporations and Municipalities, as well as the Chennai Metropolitan Water Supply and Sewerage Act, 1978, so as to regulate the collection, transportation and disposal of faecal sludge/septage and matters connected therewith. The said Tamil Nadu Act 34 of 2022 has come into force with effect from 01.01.2023, vide the Government Order seventh read above and notified in the Tamil Nadu Government Gazette Extraordinary ninth read above. The Tamil Nadu Urban Local Bodies and Chennai Metropolitan Area Septage Management (Regulation) Rules, 2022 have been issued vide the Government Order eighth read above and notified in the Tamil Nadu Government Gazette Extraordinary, tenth read above.

**8.** The Government, after careful examination of the above proposal of the Managing Director, Chennai Metropolitan Water Supply and Sewerage Board accept the same and in supersession of the earlier Guidelines issued in the Government Order first read above, approve the Septage Management Regulations and Operative Guidelines as in the Annexure, regarding removal of septage from unsewered areas, regulation of sewer tanker lorries operating in the local bodies, prevention of illegal discharge of sewerage, thereby protecting the water bodies.

**9.** The Commissioner, Greater Chennai Corporation, the Managing Director, Chennai Metropolitan Water Supply and Sewerage Board, the Director of Municipal Administration and the Director of Town Panchayats are requested to strictly implement the above guidelines in their respective jurisdictions.

**(BY ORDER OF THE GOVERNOR)**

**SHIV DAS MEENA**
**ADDITIONAL CHIEF SECRETARY TO GOVERNMENT**

**To**
The Managing Director, Chennai Metropolitan Water Supply and Sewerage Board, Chennai 600 028.
The Director of Municipal Administration, Chennai 600 028.
The Director of Town Panchayats, Chennai 600 028.
The Principal Secretary/Commissioner, Greater Chennai Corporation, Chennai 600 003.
The Managing Director, Tamil Nadu Water Supply and Drainage Board, Chennai 600 005.

**Copy to**
The Home, Prohibition and Excise Department, Secretariat, Chennai-600 009.
The Public Works Department, Secretariat, Chennai-600 009.
The Environment, Climate Change and Forests Department, Secretariat, Chennai 600 009.
The Rural Development and Panchayat Raj Department, Secretariat, Chennai 600 009.
The Health and family welfare Department, Secretariat, Chennai 600 009.
Office of the Tamil Nadu Urban Finance and Infrastructure Development Corporation Limited, Chennai 600 028.
The Hon'ble Chief Minister's Office, Secretariat, Chennai 600 009
The Senior Personal Assistant to Hon'ble Minister for Municipal Administration, Chennai–600 009
The Senior Private Secretary to Chief Secretary to Government, Secretariat, Chennai 600 009.
The Senior Private Secretary to Additional Chief Secretary to Government, Municipal administration and Water Supply Department, Secretariat, Chennai 600 009.
The Municipal Administration and Water Supply (MA.II/MA-III/MA-IV/ME-II/ME-III/MC-I/MC-II/MC-VI/WS.1/WS.II/TP.II/OP.II), Department, Secretariat, Chennai 600 009.
Stock File/Spare Copies.

**//FORWARDED BY ORDER//**

2/1/23

**SECTION OFFICER**

2/1/2023

Verified RegEstate

**Annexure to G.O.Ms.No.1, Municipal Administration and Water Supply (MW) Department, dated.02.01.2023**

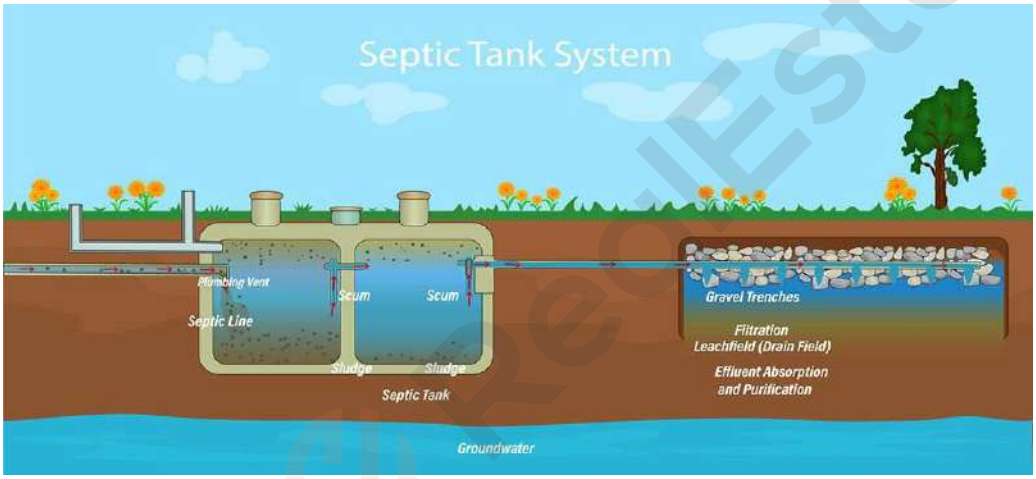


# SEPTAGE MANAGEMENT REGULATIONS AND OPERATIVE GUIDELINES

# Table of Contents

GLOSSARY OF TERMS ..... 6
DEFINITIONS ..... 8
1 INTRODUCTION ..... 10
1.1 Background ..... 10
1.2 Sanitation Status in Tamil Nadu ..... 10
1.2.1 Access and Containment ..... 11
1.2.2 Collection and Conveyance ..... 11
1.2.3 Treatment and Reuse ..... 11
1.3 Legal and Regulatory Framework for Septage Management ..... 12
1.3.1 National Level ..... 12
1.3.2 State Level ..... 14
1.3.2.1 Government Orders for Faecal Sludge and Septage Management ..... 14
1.3.2.2 Septage Management Bye-laws ..... 15
1.4 Climate Change and Resilience ..... 15
2 OPERATIVE GUIDELINES FOR LOCAL BODIES FOR EFFECTIVE IMPLEMENTATION OF SEPTAGE MANAGEMENT ..... 15
2.1 Introduction ..... 15
2.2 Characteristics of Faecal Sludge and Septage ..... 16
2.2.1 Characteristics of Septage in Tropical Countries ..... 16
2.3 On-Site Sanitation Systems (OSS): Design, Construction and Operation and Maintenance (O&M) ..... 17
2.3.1 Construction Standards for New OSS ..... 18
2.3.2 Monitoring Mechanisms for New Constructions ..... 18
2.3.2.1 Inspection of OSS ..... 18
2.3.3 Management of Non-standard OSS ..... 19
2.3.3.1 Standardization of OSS ..... 19
2.3.4 Desludging of OSS ..... 19
2.3.4.1 Maintenance of OSS ..... 19
2.3.5 Procedure for Desludging and Occupational Safety ..... 20
2.3.5.1 Desludging Process ..... 20
2.3.5.2 Occupational Safety Measures ..... 21
2.4 Septage Transportation ..... 22
2.4.1 Regulation of Septage Transportation Operators ..... 22
2.4.1.1 Licencing ..... 22
2.4.1.2 Decantation Fee ..... 22

Verified RealEstate™

2.4.2 Transportation Plan ..... 23
2.4.3 Responsibility of Septage Transporter ..... 23
2.4.4 Septage Transportation Procedure ..... 24
2.4.5 Spillage ..... 24
2.4.6 Affordable Desludging Services and Approach for Bulk Generators ..... 24
2.4.6.1 Affordable Desludging Services ..... 24
2.4.6.2 Approach for Community Toilets and Public Toilets ..... 25
2.4.6.3 Approach for Other Bulk Generators ..... 25
2.4.6.4 Monitoring Bulk Generators ..... 25
2.5 Treatment and Final Disposal ..... 26
2.5.1 Discharge Standards ..... 26
2.5.2 FS Screening Procedure ..... 28
2.5.3 Enabling Co-treatment of Septage at STPs ..... 29
2.5.4 Decanting Facility Design ..... 30
2.5.4.1 Components of Decanting Station ..... 30
2.5.5 Faecal Sludge and Septage Treatment ..... 32
2.5.6 FSTP Technology Options ..... 32
2.5.6.1 O&M Arrangements ..... 34
2.5.7 Reuse ..... 35
2.5.7.1 Treated Water ..... 35
2.5.7.2 Dried solids ..... 35
2.6 Behaviour Change Communication and Capacity Building ..... 35
2.6.1 A Behaviour Change and Communication campaign for FSM ..... 35
2.6.2 Engagement Modes with Various Stakeholders Across the Full Chain of Sanitation: Municipal Officers, Municipal Council, and Elected Representatives ..... 36
2.6.3 Households, Resident Welfare Associations, Establishments, and Institutions ..... 37
2.6.4 Septage transportation operators and sanitation workers ..... 37
2.6.5 Construction Workers and Contractors ..... 37
2.6.6 Treated Product End-Users ..... 37
2.6.7 NGOs/SHGs/CBOs ..... 38
2.6.8 Treatment Facilities as Resource Centres ..... 38
2.6.9 Engagement of NGOs, SHGs, Civil Societies ..... 38
2.7 Record Keeping and Reporting ..... 38
2.7.1 Management Information Systems (MIS) ..... 38
2.7.1.1 Access and Containment ..... 39
2.7.1.2 Emptying and Transport ..... 39

Verified RealEstate™

2.7.1.3 Disposal, Treatment and Re-use ..... 39
2.7.1.4 Sanitary Workers ..... 39
2.7.2 Web / Mobile Based Monitoring and Tracking ..... 39
3 GENDER, SANITATION AND SANITATION WORKERS ..... 40
3.1 Gender in Faecal Sludge and Septage Management ..... 40
3.2 Sanitation Workers ..... 41
4 INSTITUTIONAL ARRANGEMENTS ..... 43
4.1 Roles and Responsibilities of Sanitation Stakeholders ..... 43
5 PENAL PROVISIONS ..... 47
ANNEXURES ..... 48
ANNEXURE 1: THE SEPTAGE MANAGEMENT BYE-LAWS ..... 48
ANNEXURE 2: TECHNICAL OPTIONS FOR TOILETS UNDER SBM (URBAN) ..... 55
ANNEXURE 3: DE-SLUDGING PROCESS ..... 70
ANNEXURE 4: APPLICATION FORM FOR LICENCE FOR COLLECTION, TRANSPORTATION AND DISPOSAL OF SEPTAGE TO PRIVATE OPERATOR WITH VEHICLE(S) ..... 71
ANNEXURE 5: ULB-WISE CAPACITY OF STPs AND FSTPs PRESENT FLOW AND PERCENT UTILISATION ..... 78
ANNEXURE 6: STP/FSTP CLUSTERS AND RURAL BODIES ..... 81
ANNEXURE 7: DECANTING FACILITY DESIGN ..... 86
ANNEXURE 8: CHECKLIST FOR ASSESSMENT OF STPS AND PUMP HOUSES FOR CO-TREATMENT OF FAECAL SLUDGE ..... 88
ANNEXURE 9: ESTIMATION OF FAECAL SLUDGE GENERATED- SUMMARY OF METHODS AND ASSUMPTIONS ..... 100
ANNEXURE 10: CHECKLIST FOR ASSESSMENT OF FSTPs ..... 102
ANNEXURE 11: PROTOCOL FOR O&M ..... 107
ANNEXURE 12 (A): MEMORANDUM OF UNDERSTANDING FOR CO-TREATMENT OF FAECAL SLUDGE ALONG WITH SEWAGE AT STPs ..... 111
ANNEXURE 12 (B): MEMORANDUM OF UNDERTAKING FOR TREATMENT OF LOCAL SLUDGE AND SEPTAGE FSTP ..... 120
ANNEXURE 13: SAMPLE HOUSEHOLD SURVEY FOR IDENTIFYING ON-SITE SANITATION SYSTEM AND UNDERSTANDING DEMAND FOR DE-SLUDGING SERVICES ..... 134
ANNEXURE 14 - CLOUD BASED MOBILE – WEB TRACKING: ..... 136
ANNEXURE 15: RECORD KEEPING FORMAT AT STP / FSTP FOR INCOMING VEHICLE ..... 138

Verified RealEstate™

## LIST OF TABLES

Table 1. 1 Coverage of Treatment Facilities in Tamil Nadu ..... 11
Table 1. 2 National Level Legislative and Regulatory Provisions..... 12
Table 1. 3: State Level Existing Legislative and Regulatory Provisions ..... 14

Table 2. 1: Effluent Discharge Standards (Applicable to all Mode of Disposal)..... 26
Table 2. 2: Standards for Bio Solids Reuse..... 27
Table 2. 3: Key Stakeholder Messages..... 36
Table 2. 4: Engagement of NGOs, SHGs, Civil Societies..... 38

Table 4. 1: Roles and Responsibilities of Public Stakeholders ..... 44
Table 4. 2: Engagement of Private Sector..... 46

## LIST OF FIGURES

Figure 2. 1 Full Cycle of Sanitation..... 16
Figure 2. 2 Allowable Septage Loadings to a Sewage Treatment Plant having Septage-holding tank ..... 31

Verified RedEstate™

## GLOSSARY OF TERMS

| S. No. | ABBREVIATION | FULL FORM |
|---|---|---|
| 1 | AMRUT | Atal Mission for Rejuvenation and Urban Transformation |
| 2 | ASP | Activated Sludge Process |
| 3 | BIS | Bureau of Indian Standards |
| 4 | BOD | Biological Oxygen Demand |
| 5 | CMWSSB | Chennai Metropolitan Water Supply and Sewerage Board |
| 6 | COD | Chemical Oxygen Demand |
| 7 | CPHEEO | Central Public Health & Environmental Engineering Organisation |
| 8 | CSP | City Sanitation Plans |
| 9 | CT | Community Toilets |
| 10 | DMA | Directorate of Municipal Administration |
| 11 | DTCP | Directorate of Town & Country Planning |
| 12 | EASP | External Activated Sludge Process |
| 13 | FS | Faecal Sludge |
| 14 | FSM | Faecal Sludge Management |
| 15 | FSSM | Faecal Sludge and Septage Management |
| 16 | FSTP | Faecal Sludge Treatment Plant |
| 17 | GCC | Greater Chennai Corporation |
| 18 | GIS | Geographical Information System |
| 19 | GoTN | Government of Tamil Nadu |
| 20 | GPS | Global Positioning System |
| 21 | HPGF | Horizontal Planted Gravel Filter |
| 22 | IEC | Information, Education and Communication |
| 23 | IHHL | Individual Household Latrine |
| 24 | IS | Integrated Settler |
| 25 | KfW | KfW Bankengruppe |
| 26 | MAWS | Municipal Administration and Drinking Water Supply |
| 27 | MBBR | Moving Bed Biofilm Reactor |
| 28 | MIS | Management Information Systems |
| 29 | MLD | Million Litres Per Day). |
| 30 | MoU | Memorandum of Understanding |
| 31 | MP | Maturation Pond |
| 32 | NGO | Non-Government Organisation |
| 33 | NRCP | National River Conservation Plan |
| 34 | NTADCL | New Tirupur Area Development Corporation Limited |
| 35 | O&M | Operations and Maintenance |
| 36 | ODF | Open Defecation Free |
| 37 | OSS | On-site Sanitation Systems |
| 38 | PNP | Periyanaicken-palayam |
| 39 | PT | Public Toilets |
| 40 | QA | Quality Assured |
| 41 | SBM | Swachh Bharat Mission |
| 42 | SBR | Sequencing Batch Reactor |

Verified RealEstate

| S. No. | ABBREVIATION | FULL FORM |
|---|---|---|
| 43 | SDB | Sludge Drying Bed |
| 44 | SHG | Self Help Group |
| 45 | SIP | State Investment Plan |
| 46 | SLA | Standard Licencing Agreement |
| 47 | SR | Stabilization Reactor |
| 48 | SRS | Septage Receiving Station |
| 49 | STP | Sewage Treatment Plant |
| 50 | SWM | Solid Waste Management |
| 51 | TNCDBR | Tamil Nadu Combined Development and Building Rules |
| 52 | TNPCB | Tamil Nadu Pollution Control Board |
| 53 | TNUDP | Tamil Nadu Urban Development Project |
| 54 | TWAD | Tamil Nadu Water Supply and Drainage Board |
| 55 | UGSS | Underground Sewerage Scheme |
| 56 | ULB | Urban Local Bodies |
| 57 | WSP | Waste Stabilization Pond |

Verified RedEstate ™

## DEFINITIONS

In this guideline, unless repugnant to the context or inconsistent therewith, the following words, phrases and expressions shall bear the meaning hereinafter, respectively, assigned to them:

1. **Authority** shall mean and include the Municipality/ Municipal Corporation/ Town Panchayat/ Regional Directorate of Municipal Administration/ Assistant Directorate of Town Panchayats/ Commissionerate of Municipal Administration/ Directorate of Town Panchayats, or such other department as may be notified/ appointed from time to time for the purpose of implementation of these guidelines.
2. **Biochemical oxygen demand** means the amount of oxygen taken up by microorganisms that decompose organic waste matter in water. It is used as a measure of the amount of certain types of organic pollutant in water.
3. **Co-composting** means the process by which two forms of waste are biologically decomposed under controlled conditions by microorganisms under aerobic and thermophilic conditions.
4. **Consent to Operate** means the certificate issued by the Tamil Nadu Pollution Control Board prior to commencement of FSTP operations.
5. **Containment** means the temporary storing of water to prevent further contamination or harm to human health and the environment.
6. **Contractor** shall mean the person or persons, as the case may be, with whom the ULB has entered into the operation and maintenance (O&M) contract, or any other agreement or a material contract for construction, operation and/ or maintenance of the STP/ FSTP or matters incidental thereto.
7. **Co-treatment** means treating faecal sludge and septage along with sewage at a Sewage Treatment Plant.
10. **Decantation Fee** shall mean the amount payable by Desludging Operators to the ULB upon each visit to the decanting/ treatment facility for the disposal of Faecal Sludge and Septage.
11. **Decanting Facility** means the structure that receives Faecal Sludge and Septage and pumps it to another Sewage Pumping Station or a Sewage Treatment Plant.
12. **Desludging Operator** shall mean any person or firm or self-help group or society or private company granted the licence to collect, transport and dispose Faecal Sludge and Septage.
13. **Desludging Vehicle** means the vacuum trucks or such other vehicles equipped with motorized pumps and storage tank owned by the ULB or Desludging Operator, of such design specification as may be approved from time to time by the ULB, for emptying and transporting Faecal Sludge and Septage.
14. **Faecal Sludge** means raw or partially digested, in a slurry or semi solid form, the collection, storage or treatment of combinations of excreta and black water, with or without grey water. It is the solid or settled contents of pit latrines and septic tanks.
15. **Faecal Sludge Treatment Plant (FSTP)** means a treatment plant of the design specifications and guidelines issued by the concerned Authority from time to time.

Verified by RealEstate

16. **Hydraulic retention time** means the volume of the aeration tank divided by the influent flow-rate. HRT is usually expressed in hours (or sometimes days).
17. **Licencing Fee** shall mean the amount payable by Desludging Operators annually to obtain a licence to utilise a treatment or decanting facility for disposal of septage collected.
18. **Operations and Maintenance (O&M)** means the operation and maintenance of the FSTP and includes all matters connected with or incidental to such operation and maintenance and provision of services and facilities in accordance with the provisions of these guidelines.
19. **Pre-treatment process** means the process removes insoluble substances that are difficult to decompose biologically by means of sedimentation, floating, and screening.
20. **Pump Station** means the facility that consists of pumps and service equipment designed to pump flows from lower to higher elevations to allow continuous and cost-effective treatment.
21. **Septage** means the liquid and solid material that is pumped from a septic tank, cesspool, or such on site treatment facility after it has accumulated over a period of time.
22. **Sewage** means the wastewater containing human excreta either dissolved or undissolved, discharged from toilets and other receptacles intended to receive or retain such human excreta.
23. **Septic Tank** means a water-tight single storage tank in which sewage is retained sufficiently long to permit sedimentation.
24. **Sewage Treatment Plant (STP)** means a treatment plant of the design specifications and guidelines issued by the concerned authority from time to time, owned by the ULB, capable of the treatment and disposal of sewage.
25. **Screen Chamber** means a screen is a device with openings generally of uniform size for removing bigger suspended or floating matter in sewage.
26. **Treated Products** shall mean effluent and stabilized bio solids generated by the treatment of Faecal Sludge and Septage that meet the regulatory standards.
27. **Test Results** shall mean measurements from the testing carried out for assessing the FSTP performance and the quality of the Treated Products.
28. **Twin leach pits** means the two underground chambers (pits) provided to hold faecal sludge. A single pipe leads from the toilet to a small diversion chamber, from which separate pipes lead to the two underground chambers.
29. **Urban Local Body (ULB)** means the Municipal Corporation/ Municipality/ Town Panchayat located within the State of Tamil Nadu.

Verified by PodEstate

# 1 INTRODUCTION

## 1.1 Background

In Tamil Nadu, On-Site Sanitation Systems (OSS) remain the dominant household sanitation arrangement, with nearly 70 per cent of households connected to OSS[1]. With current sanitation infrastructure being predominantly networked sanitation systems and sewage treatment plants, there is insufficient infrastructure designed specifically for the treatment of Faecal Sludge and Septage (FSS) accumulated within OSS. In addition, the scope for treatment is limited to larger cities and towns which, unlike smaller local bodies, are better resourced and capacitated to create and manage such treatment systems that require large investment and long gestation periods. This excludes much of the population dependent on OSS.

The improper design, construction, and maintenance of OSS, unsafe disposal practices and inadequate treatment capacity cause untreated FSS to contaminate both surface and ground water resources. These deficits in sanitation infrastructure and service delivery pose severe environmental and public health risks, which are typically higher for vulnerable communities.

Tamil Nadu is one of the first states in India to recognize the importance of Faecal Sludge and Septage Management (FSSM) to achieve 100 per cent sanitation. Adopted in 2014, the 'Operative Guidelines for Septage Management for Local Bodies in Tamil Nadu' gave impetus to address the challenges of inadequate and improper sanitation systems.

The recent COVID-19 crisis has starkly highlighted the need for renewed focus on the full cycle of sanitation, including the sustainability and inclusiveness of sanitation systems. This update to the Guidelines responds to this critical need and enables Local Bodies to scale up and deliver safe sanitation for all.

## 1.2 Sanitation Status in Tamil Nadu

Tamil Nadu has a high urban population (48.45%, Census 2011), with 21 Municipal Corporations, 138 Municipalities, and 490 Town Panchayats. In the context of recent extreme weather events and the pandemic, resilient and sustainable urban infrastructure systems are imperative to the state's rapidly urbanizing economy. This includes providing safe and sustainable sanitation for all.

To achieve this, Tamil Nadu has recognized the importance of Faecal Sludge and Septage Management (FSSM) as a viable method for scaling sanitation – both as a complement to networked sanitation in metropolitan cities as well as a standalone solution for small and medium towns.

As a comprehensive program that regulates periodic septic tank cleaning, septage transportation, treatment, re-use, and disposal, FSSM targets a large proportion of the State's population reliant on On-site Sanitation Systems (OSS).

[1] Central Statistical Organization 2018 *National Sample Survey (76th Round) Drinking water, sanitation and hygiene in India*. Government of India

### 1.2.1 Access and Containment

As per Census 2011, there are 18,493,003 households in Tamil Nadu with 48.29 per cent households having individual household latrine (IHHL) facilities within their premises. In urban Tamil Nadu, this figure stands at 75.15 per cent households having IHHL facilities within premises. Of the urban households having IHHL, 63.51 per cent households are connected to OSS, of which 50.45 per cent households are connected to septic tanks (Census 2011). The design of OSS across Tamil Nadu is varied and does not conform to design standards. Additionally, around 6 per cent households in Tamil Nadu depend on public latrine facilities, and in urban Tamil Nadu it is 8.6 per cent.

### 1.2.2 Collection and Conveyance

Around 14 per cent of Tamil Nadu is connected to a piped sewer system, with this figure increasing to 27.4 per cent in urban Tamil Nadu (Census, 2011).

Faecal Sludge and Septage collection and transportation is carried out by private vacuum truck operator market, and some urban local bodies have their own vehicles.

These septage transportation operators are small enterprises with trucks fitted with septage collection tank, accessories and provide competitively priced services on-demand to households and other generators. The de-sludging frequency in the State differs from customer to customer due to a large variance in the range of OSS sizes. While charges for de-sludging are mostly reasonable, except in areas with difficult terrain such as hilly areas.

### 1.2.3 Treatment and Reuse

Sewage and Septage collected from networked and non-networked systems need to be safely transported and disposed in designated treatment facilities.

There are currently 69 operational Sewage Treatment Plants (STPs) in Tamil Nadu with a total capacity of 1492 MLD (refer Table 1.1).Tamil Nadu has taken up further a State Investment Plan (SIP) for scaling of treatment facilities across 649 Urban Local Bodies (ULBs). As part of this SIP, around 35 of these STPs with extra treatment capacity have initiated co-treatment of faecal sludge along with sewage. The SIP also proposes standalone Faecal Sludge Treatment Plants (FSTPs) for treating faecal sludge and septage from OSS. There are 19 completed Faecal Sludge Treatment Plants (FSTPs) that have a combined capacity of 0.58 MLD (refer Table 1.1). All sanctioned FSTPs are being co-located with solid waste treatment facilities, and this has enabled co-composting of the dried treated solids with organic municipal solid waste. The coverage of treatment facilities across the three tiers of Urban Local Bodies (ULBs) is provided in the table below.

**Table 1. 1 Coverage of Treatment Facilities in Tamil Nadu**

| ULB Type | No. of ULBs with | | | | | | | | Requirement for treatment facilities | Total Number of ULBs |
|---|---|---|---|---|---|---|---|---|---|---|
| | STP coverage | | | | FSTP coverage | | | | | |
| | Operational | | Upcoming | | Operational | | Upcoming | | | |
| | No. of STPs | No. of ULBs | No. of STPs | No. of ULBs | No. of FSTPs | No. of ULBs | No. of FSTPs | No. of ULBs | | |
| M. Corp | 17 | 18 | 2 | 1 | - | - | 1 | 1 | - | **20** |

| | | | | | | | | | | |
|---|---|---|---|---|---|---|---|---|---|---|
| Chennai (M. Corp) | 13 | 1 | - | - | - | - | - | - | - | **1** |
| M | 36 | 37 | 14 | 14 | 17 | 17 | 29 | 32 | 38 | **138** |
| TP | 3 | 68 | 8 | 11 | 2 | 16 | 8 | 54 | 341 | **490** |
| **Total** | **69** | **124** | **24** | **26** | **19** | **33** | **37** | **87** | **379** | **649** |

## 1.3 Legal and Regulatory Framework for Septage Management

### 1.3.1 National Level

There are legislative and regulatory provisions for sanitation but in the case of FSSM the resources are very limited. The list of acts, policies, and other regulatory provisions for sanitation/FSSM the national and state levels are provided in the table below.

**Table 1. 2 National Level Legislative and Regulatory Provisions**

| Legislation/ Regulation | Key Focus | Provision for Septage Management |
|---|---|---|
| **Acts** | | |
| The Water (Prevention and Control of Pollution) Act, 1974 and Environment Protection Act, 1986 | Provides guidelines for mitigation and prevention of water pollution and for maintaining or restoring wholesomeness of water in the country. | Prohibits the disposal of polluting matter in streams, wells and sewers, or on land in excess of the standards established by the state boards |
| Environmental Protection Act, 1986 | Provides standards for emission or discharge of environmental pollutants for the purpose of protecting and improving the quality of the environment, and preventing and abating environmental pollution. | Enables the constitution of a state-level water quality review committee to generate reliable water quality data and facilitate activities ensuring prevention of pollution to water bodies. |
| The Prohibition of Employment as Manual Scavengers and their Rehabilitation Act, 2013 (Central Act 25 of 2013), | Provides directives for banning manual scavenging and lists requirement of protective gears and cleaning devices for workers to prevent manual interventions. Additionally, it provides options for rehabilitation of manual scavengers. | Hazardous Cleaning has been defined in the 2013 Act as the cleaning of sewers and septic tanks manually without utilizing necessary protective gears and cleaning devices. A detailed report for use of protective gears, cleaning devices and obligations of employers towards sanitary workers is presented in the Prohibition of Employment as Manual Scavengers and their Rehabilitation Rules, 2013. |
| **Policies** | | |
| National Urban Sanitation Policy, 2008 | Prioritizes state-wide sanitation strategies and city sanitation plans (CSP) with a | Provision for septage management exists but is not part of service-level benchmarking. |

Verified RealEstate ™

| Table 1. 2 National Level Legislative and Regulatory Provisions | | |
|---|---|---|
| **Legislation/ Regulation** | **Key Focus** | **Provision for Septage Management** |
| | focus on service-level benchmarking. The policy envisages a city sanitation task force. | |
| Advisory Note on Septage Management, 2013 | Development of a septage management sub- plan as part of CSP. | Recommends septage management as an essential component for citywide sanitation |
| National Urban Faecal Sludge and Septage Management Policy, 2017 | Recognition of faecal sludge and septage management as a sanitation solution. | Focused on areas with no sewers, emphasis on need for onsite and offsite sanitation systems to exist in tandem. |
| **Schemes and Guidelines** | | |
| Swachh Bharat Mission, 2014 | Prioritizes ODF and emphasizes provisions of containment system as per IS 2470 standards. | Focuses on ending open defecation with some focus on the treatment of septage and wastewater. |
| Swachh Bharat Mission 2.0, 2021 | Focuses on solid waste management and used water management, including faecal sludge and septage | Key objective is to ensure that no untreated faecal sludge or used water is discharged into the environment, and all used water (including sewerage and septage, grey water and black water) is safely contained, transported, and treated, along with maximum reuse of treated used water, in all cities with less than 1 lakh population |
| Atal Mission for Rejuvenation and Urban Transformation, 2014 | Focused on basic services such as water supply, sewerage, urban transport to households. | Focused on ensuring coverage of water supply, sewerage and septage connection to all households. |
| Atal Mission for Rejuvenation and Urban Transformation 2.0, 2021 | Provide 100% coverage of water supply to all ULBs and 100% coverage of sewerage and septage in 500 AMRUT cities. | Focuses on continuation of AMRUT 1.0. Additionally, aims to ensure sewerage / septage management in AMRUT cities including recycling and reuse of treated used water. |
| **National Standards Agencies** | | |
| Bureau of Indian Standards (BIS) | Provides standards for building materials and their components. | Provides the standards for construction of septic tanks along with user interface description. |
| Central Public Health & Environmental Engineering Organization (CPHEEO) | Supports in policy formulation in the field of water supply and sanitation including municipal solid waste management. | Provides support in implementation, operation & maintenance of urban sanitation projects and helps to adopt latest technologies in these sub sectors. |

Verified RediEstate™

### 1.3.2 State Level

At the State level, the existing state acts have not explicitly used the terms "Septage" or "Faecal Sludge", instead terms such as filth, sewage, waste from cesspools/latrines or night soil are used which could be interpreted as Faecal Sludge and Septage (FSS). The summary of the existing provisions for regulating unsafe disposal of the same is listed in Table 1.3 below.

**Table 1. 3: State Level Existing Legislative and Regulatory Provisions**

| Act | Provisions |
|---|---|
| The Chennai Metropolitan Water Supply and Sewerage Act, 1978 | **Chapter II- 6 (vi)-** Without prejudice to the generality of the foregoing provision, the Board shall have power to prevent pollution of any water including any water sources, water course or channel utilized for the purpose of the Chennai Metropolitan Area. |
| TN District Municipalities Act, 1971 | **Chapter VIII- 157, 159** - Prohibition of improper disposal of carcasses, rubbish and filth and outflow of filth<br>**Chapter VIII-159** -Prohibition against throwing rubbish or filth into drains<br>**Chapter XV-316-**Penalty for omission to take out licence for vehicle |
| The Chennai City Municipal Corporation Act, 1919[2] | **Chapter VIII- 202 (2) -** Prohibition against irregular methods of depositing rubbish or filth.<br>**202 (3) -** Prohibition of improper disposal of carcasses, rubbish and filth.<br>**202 (5)**- Prohibition against allowing sewage to flow in streets<br>**Schedule VII- 202 (2)** Irregular deposit of rubbish or filth-Fine 10 rupees.<br>**202 2** [(3)] Depositing carcasses of animals, rubbish or filth in improper places-Fine 20 rupees.<br>**202 3** [(5)] Allowing filth to flow in streets- Fine 20 rupees. |
| TN Public Health Act, 1939 Chapter IV -34, 35, 36 - | Sullage/sewage/injurious refuse not to be left into streets/public drains, pollution of water-courses prohibited<br>**Chapter VI, 44** - Power of Health Officer/local authority to abate nuisance and deposit of rubbish, etc., in street etc.,<br>**Chapter XV, 129** - Rules, by-laws, penalties - punishable with imprisonment which may extend to three months or with fine or with both. |

#### 1.3.2.1 Government Orders for Faecal Sludge and Septage Management

A State Investment Plan (SIP) (issued as G.O. NO. 88) was developed to enable the scale up of treatment facilities for 663 ULBs with a population of 2.5 crores across the State in a phase-wise manner. The SIP has been prepared using two core principles:

i. Utilization of existing treatment facilities through co-treatment of septage with sewage; and
ii. Adoption of a cluster approach, wherein ULBs are clustered around an existing or new treatment facility.

[2] The Chennai City Municipal Corporation Act 1919 is representative of various other Corporation Acts in Tamil Nadu such as Coimbatore Municipal Corporation Act 1981, The Tiruchirappalli City Municipal Corporation Act, 1994 etc. as they have similar provisions on regulation of filth, sewage, waste from cesspools/latrines or night soil.

In 2018, the government sanctioned budgetary allocations for Phase III of INR 200 crores for 49 FSTPs – in G.O. (Ms.) No. 88, MAWS (MA-3), dated 31.08.2018. In 2019, INR 31 crores for an additional 11 FSTPs was sanctioned in G.O. (Ms). No. 12, MAWS (MA-2) Dept., dated 29.01.2019.

The GoTN has issued a Government Order – G.O. (2D) 35, MAWS (MA3), dated 15.05.2020– that operationalizes the cluster approach and institutionalizes two new governance mechanisms that enable the shared utilization of treatment facilities and ensures safe disposal of faecal sludge and septage within these ULB clusters. The first is a Memorandum of Understanding between ULBs within a cluster. This governs the shared usage and financing of O&M of existing and upcoming treatment facilities (both STPs and FSTPs). The second is a Standard Licence Agreement to streamline septage transportation process and regulations and align desludging operations with the cluster-approach.

#### 1.3.2.2 Septage Management Bye-laws

The GoTN has issued Septage Management Bye-laws (refer to Annexure 1), which should be adopted by Local Bodies with FSTPs. Local Bodies with STPs to include provisions for co-treatment as provided in the Septage Management Bye-laws.

### 1.4 Climate Change and Resilience

Climate change can increase or create risks for urban sanitation services such as damaging or reducing functionality of infrastructure, disrupting key services such as electricity and water supply, which ultimately impacts sanitation delivery. Further, those residing in low income or informal settlements are more vulnerable to the impact of climate change. Information from early warning systems on weather conditions would allow for preparation and mitigation measures. This should be complemented with public messaging on risk management and ensuring availability of support services.

In general, planning for sanitation infrastructure and service delivery should consider operating under extreme climatic conditions such as flooding and drought. Approaches such as the World Health Organization (WHO)'s Sanitation Safety Planning (SSP) framework could be considered for identification of public health risks and development of localized plans.

## 2 OPERATIVE GUIDELINES FOR LOCAL BODIES FOR EFFECTIVE IMPLEMENTATION OF SEPTAGE MANAGEMENT

### 2.1 Introduction

To implement a robust FSSM system, Local Bodies should focus on the Full Cycle of Sanitation (FCS). Improvement efforts should equally address the infrastructure, services, and stakeholder components of the following five stages of the FCS:

1) safe containment (consisting of toilets and septic tanks/drainage systems),
2) safe emptying services like de-sludging,
3) safe transport of waste by trucks,
4) safe treatment in sewage treatment plants / faecal sludge treatment plants, and
5) safe disposal/reuse. The stages are explained in the diagram below.

Verified RealEstate

**Figure 2. 1 Full Cycle of Sanitation**

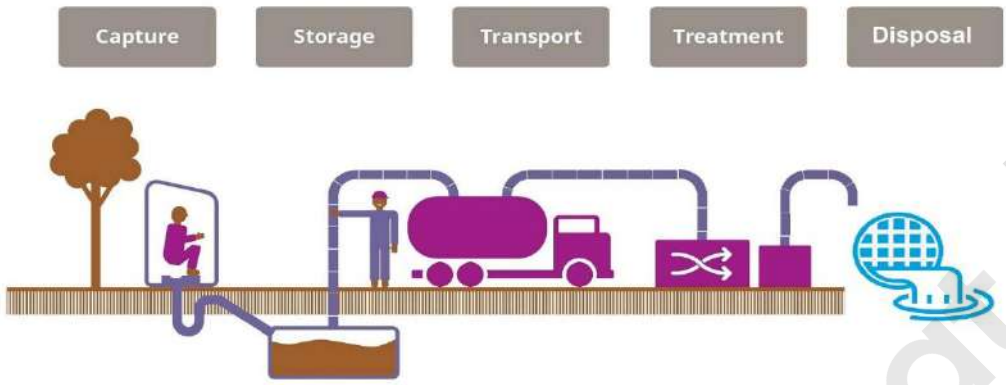


Source: GoTN

## 2.2 Characteristics of Faecal Sludge and Septage

FSS is a by-product of pretreatment of household wastewater in a septic tank where it accumulates over time, and it is generally pumped out of a septic tank or onsite sanitation system using a vacuum tanker. Usually, septic tanks retain 60–70 per cent of the solids, oil and grease that enter it. The scum accumulates on the top and the sludge settles to the bottom, comprising 20–50 per cent of the total volume of the septic tank.

Offensive odor and appearance are the most prominent characteristics of septage. It is a host of many disease-causing organisms along with significant level of grease, grit, hair, and debris. The factors which influence the characteristics of septage are the design and performance of the OSS, food habits of users, tank-emptying technology and pattern, the intrusion of groundwater, temperature, admixtures to septage like grease, kitchen, or solid waste, and the storage duration, which can last from months to years. These characteristics have practical implications for treatment. As septage is a very variable material, management systems need to be designed on a case-by-case basis.

### 2.2.1 Characteristics of Septage in Tropical Countries

**Table 1: Characteristics of Septage in tropical countries**

| PARAMETER | SEPTAGE SOURCE | | WWTP SLUDGE |
|---|---|---|---|
| | PUBLIC TOILET | SEPTIC TANK | |
| pH | 1.5–12.6 | | |
| | 6.55–9.34 | | |
| Total solids, TS (mg/l) | 52,500 | 12,000–35,000 | |
| | 30,000 | 22,000 | |
| | | 34,106 | |
| | ≥ 3.5% | < 3% | < 1% |
| Total volatile solids, TVS | 68 | 50-73 | |

| | | | |
|---|---|---|---|
| (as percentage of TS) | 65 | 45 | |
| COD (mg/l) | 49,000 | 1,200–7,800 | |
| | 30,000 | 10,000 | 7-608 |
| | 20,000–50,000 | <10,000 | 500–2,500 |
| BOD (mg/l) | 7,600 | 840–2,600 | |
| | | | 20-229 |
| Total nitrogen, TN (mg/l) | | 190–300 | |
| | | | 32-250 |
| Total Kjeldahl nitrogen, TKN (mg/l) | 3,400 | 1,000 | |
| NH4-N (mg/l) | 3,300 | 150–1,200 | |
| | 2,000 | 400 | 2-168 |
| | 2,000–5,000 | < 1,000 | 30-70 |
| Nitrates, NO3 (mg n/l) | | 0.2–21 | |
| Total phosphorus, TP (mg p/l) | 450 | 150 | 9-63 |
| Faecal Coliform (CFU/100 ml) | 1x105 | 1x105 | 6.3x104–6x105 |
| Helminths eggs (numbers/l) | 2,500 | 4,000–5,700 | |
| | 20,000–60,000 | 4,000 | 300–2,000 |
| | | 600–6,000 | |
| | | 16,000 | |

Source: Faecal sludge management, IWA, 2014

## 2.3 On-Site Sanitation Systems (OSS): Design, Construction and Operation and Maintenance (O&M)

Toilets consist of two main structures: super-structure which includes components such as the toilet pan, platform, water closet, etc. and sub-structure, which performs the following key functions: containment, treatment/ waste volume reduction and on-site disposal of liquid effluent. The sub-structure is referred to as OSS throughout this document. On-site disposal of liquid effluent is primarily dependent on the volume of the liquid effluent, reuse practices and the hydro-geological conditions at the site. Some OSS must be desludged as part of maintenance which leads to off-site FSSM. There are a range of OSS such as single pit to advanced treatment systems such as small STPs and DRDO biodigester toilets.

The following OSS are recommended under SBM: twin leach pits, septic tanks with soak away/ other standard methods of liquid disposal, DRDO bio-digestor tanks and aerobic bio-tanks. These could cater to a range of waste generators such as individual households to large generators such as community toilets. Detailed description of each recommendation is provided in SBM guidelines Annexure II: Technical Options for Toilets under SBM (Urban) (refer to Annexure 2). In addition, CPHEEO also refers to few other systems such as Johkasou. Bureau of Indian Standards (BIS) has detailed design and construction standards for twin leaching systems, and septic tanks. Apart from these, the Tamil Nadu Pollution Control

Board (TNPCB) approves sewage treatment systems for apartment complexes and commercial establishments. The OSS constructed as per the guidelines described in SBM, CPHEEO and BIS, or any other designs approved by the state government and the local bodies are considered to be "standard systems". In addition to this, prefabricated systems approved by any of the above agencies is also considered to be standard OSS. In practice, many OSS are not constructed as per the standard design, and these are referred to as non-standard OSS in this document. There could be a large number of non-standard OSS, therefore an approach of managing non-standard OSS is essential. This section therefore covers two aspects: management of new constructions and improvement/ retrofitting of existing non-standard OSS.

### 2.3.1 Construction Standards for New OSS

The design, construction and installation of septic tanks/OSS shall be in accordance with the provisions of the a) National Building Code of India, 2016; b) Bureau of Indian Standards, Code of Practice for Installation of Septic Tanks; c) Manual on sewerage and sewage treatment systems, CPHEEO, 2013; d) Swachh Bharat Mission Guidelines, 2014 and 2021, and all relevant laws or directions pertaining at that time. These are summarised in Annexure 2.

Local Bodies should ensure that new community and public toilets adhere to the prescribed standards for OSS. Local Bodies are empowered respective Acts and Rules such as DMA and Tamil Nadu Combined Development and Building Rules (TNCDBR), 2019 and should evaluate designs and construction specification as per the standards as part of building plan approval.

### 2.3.2 Monitoring Mechanisms for New Constructions

#### 2.3.2.1 Inspection of OSS

Whenever any construction/modification of OSS is underway in the jurisdiction of a local body, it is mandatory for the designated authority from the local body to undertake field inspection to ensure that the construction is in accordance with the standards. The following processes are suggested during inspection of the septic tanks of the building applicants:

i. The applicant/owner of the building photographs and geo-tags (longitude and latitude) the OSS being constructed, showing:
   - Access to cleaning and/or desludging: an open manhole and the top view of the chamber
   - In areas covered by UGSS, the connection to UGSS
   - In case of OSS with on-site disposal of liquid effluent, the connection of the OSS outlet to the soak-away structure

ii. The applicant/owner of the building has to take photographs as mentioned above, in two stages:
   - Under-construction: A digital copy of the photographs is to be uploaded and submitted either online or any other media as directed by the Authorities

- Completion of construction. Copies of the photographs are to be printed and made available for inspection during site visits by the designated authority. Copies are also to be submitted to obtain the completion certification.

The designated authority from the local body carrying out site inspection may also observe and document the following:

i. Structures on excreta disposal arrangements as specified in the plan against as constructed
ii. Conformity to design dimensions
iii. Existence of water-seal in the case of water-flush
iv. Connection of toilet outlet to UGSS, if there
v. Connection of OSS outlet to soak-away structure
vi. Provision of access for cleaning and desludging
vii. Minimum distance maintained for containment structure to drinking water source

In Town Panchayats and Village Panchayats which fall short of resources for verification, the following alternatives are suggested:

i. Designated authority from the nearest local bodies may be deputed for verification.
ii. Physical verification be conducted on all households that have defaulted in submitting photographs and on only a sample of the compliant households.

### 2.3.3 Management of Non-standard OSS

#### 2.3.3.1 Standardization of OSS

Local bodies shall issue notice to the applicant/owner of the building:

i. In cases where the OSS does not meet the standard design and construction norms - To replace or appropriately modify the existing OSS to meet the standard design and construction norms.
ii. In cases where there is no sanitation facility or insanitary latrines - To construct new sanitation facility and new OSS of standard design.
iii. In addition, Local Bodies shall convert existing non-standard OSS which belong to local bodies such as OSS of CT, PT to standard OSS.

### 2.3.4 Desludging of OSS

#### 2.3.4.1 Maintenance of OSS

FSS must be removed from OSS[3] at least once every 2 or 3 years and transported off-site for treatment prior to disposal. Septage Transportation Operators are required for desludging of OSS and to ensure safe disposal of FSS at a treatment plant. The responsibility of O&M as well as desludging of OSS in a manner that is safe and in compliance with the Prohibition of Employment as Manual Scavengers and Their Rehabilitation Act, 2013 (Central Act 25 of 2013) the rules made thereunder, lies with the owner or occupier of the property. The owner or occupier of the property should conduct periodic and routine desludging based on capacity of the OSS. The owner or occupier should conduct periodic checks of the OSS and soak away structures to ensure there is no leakage.

[3] Properly operated OSS such as twin pits may not require desludging services

### 2.3.5 Procedure for Desludging and Occupational Safety

#### 2.3.5.1 Desludging Process

The desludging process comprises the following key steps: (i) site assessment, (ii) assessment of OSS, (iii) desludging process, and lastly (iv) disposal of FSS at a designated disposal facility such as a decanting station or STP or FSTP. The detailed desludging process is presented in Annexure 3.

i. Site Assessment:
- Before leaving for the site, the desludging vehicle needs to be equipped with all safety gears, safety equipment and first aid kit.
- On reaching the site, the operator has to identify the location and distance to the OSS and decide on number of hose pipes required for the desludging process.
- The desludging site maybe filled with thorns, bushes or septage outflow and the worker need to be protected with proper clothing, gloves and boots to prevent contact with septage and physical injuries.
- Conduct site inspection for possible hazards such as identifying high groundwater that could cause a tank to float, if emptied.

ii. Assessment of OSS
- The desludging workers shall undertake visual inspection of the OSS to check the a) Type of Lid; b) Presence of Vent-pipes and c) Presence of inlet pipe and sanitary Tee
- Opening the Lid - In case the OSS lid is a sealed structure, the worker needs to use a crowbar/hammer to break open the lid. The worker should be careful while opening the lid as excessive weight on lid or may result breakage and accidental falls. The workers should also make sure to wear masks while opening the lid as there are dangers of exposure to harmful gases.
- Vent Pipes - Desludging workers need to check for well-placed vent-pipe which indicates that an OSS may not have harmful gases trapped inside. In any case, the worker shall wear masks while opening the lids and keep the tank ventilated or open for sufficient time before starting the desludging.
- Assessing the Faecal Sludge and Septage - Once the lid is opened, the workers shall use a long handle-rod to determine the sludge level and further use a torch to check the nature and viscosity of the faecal sludge and septage.

iii. Desludging
- To start the desludging, the worker shall lower the hose pipe into the tank and connect the other end to the inlet valve in the truck and switch on the motor.
- The desludging worker needs to constantly check the septage level in the vehicle level gauge to determine the quantity of sludge that can be desludged.
- If the sludge is found to be too thick for suction, workers can blow air by reversing the motor (only in some cases), mix the thick sludge with water using stick or scrape it with a stick or flat-bottomed tool.
- After desludging, the worker should leave around 1-2 inches of sludge in the tank for future decomposition.

Verified RealEstate™

- The workers should also ensure that the OSS lids/access covers are securely closed before leaving the site to ensure no accidental falls.

#### 2.3.5.2 Occupational Safety Measures

The Septage Transportation Operator shall take the following safety precautions before and during desludging:

i. The desludging worker should be equipped with all safety tools such as i) safety cones/caution tapes to demarcate and cordon off the area of operation; ii) torches to check FSS in OSS; iii) flex tapes to fix leakages in hoses; iv) FSS blockage removal tools; v) crowbar/hammer to open OSS lids and other safety tools as required listed in the Prohibition of Employment as Manual Scavengers and their Rehabilitation Act, 2013 (Central Act 25 of 2013).

ii. The desludging worker should be equipped with all protective gears such as i) gloves to prevent contact with FSS and physical injuries; ii) masks to prevent inhalation of harmful gases; iii) safety goggles to prevent FSS splashes and exposure to harmful gases; iv) boots to prevent physical injury due to thorns, and contact with FSS; v) reflective jackets to ensure clear visibility of ongoing desludging work; vi) head bands to promote hygiene by avoiding touching of face. The State may define the specifications for PPE which shall be followed for ensuring safety of sanitation workers. PPE must be procured considering female workers engaged in the sanitation works to ensure appropriate size of PPE is available for them.

iii. The desludging vehicle should be equipped with first aid kits consisting of medical supplies and adequate cleaning materials or disinfectants while proceeding for desludging.

iv. All desludging workers should be immunized for tetanus, hepatitis A and B.

v. All desludging workers should be trained on hygienic practices such as handwashing regularly, especially before eating. In case of contact with sludge, desludging workers should immediately wash hands.

vi. The desludging workers should undergo training for proper usage of safety gear, safety tools and first aid kits.

vii. Consumption of tobacco and alcohol during desludging should be prohibited.

viii. Desludging of OSS is to be done mechanically with requisite protective gear and safety devices, and in accordance with the Prohibition of Employment as Manual Scavengers and their Rehabilitation Act, 2013 (Central Act 25 of 2013), which states in Chapter III, Prohibition of insanitary latrines and employment and engagement as manual scavenger, that: *"no person, local authority or any agency shall, after the date of commencement of this Act, […]*
*(b) engage or employ, either directly or indirectly, a manual scavenger, and every person so engaged or employed shall stand discharged immediately from any obligation, express or implied, to do manual scavenging."*

ix. All desludging workers are advised not to enter and manually clean any OSS except under circumstances as directed in Chapter II, Obligations of Employer Towards Employees Engaged in the Cleaning of Sewer or Septic Tank of the Prohibition of Employment as Manual Scavengers and their Rehabilitation Rules, 2013, which states that: *"no person shall be allowed to clean a sewer manually, with the protective gear and safety devices except: -*

*(a) for the removal of concrete FRP (Fibre Reinforced Plastic) or damaged manhole door where mechanical equipment cannot be put into operation.*
*(b) for inter-linking the newly laid sewer main with the existing sewer main, in case of sewer of size of more than 300 mm diameter.*
*(c) for the removal of submersible pump sets fixed at the bottom of the suction wells.*
*(d) for the reconstruction of the manhole or rectification of the sewer main.*
*(d) Any circumstance, when it is absolutely necessary to have the manual sewage cleaning, after the CEO of the local authority has permitted to do so after recording in writing the specified valid reasons for allowing such cleaning.*
*For the purposes of clauses (c) and (d) of sub-rule (1), before allowing entry of a person in the sewer, sewage shall be totally emptied."*

## 2.4 Septage Transportation

Emptying and Transportation refers to the safe collection of FSS through mechanised means and safe transportation of the collected FSS from OSS to the designated disposal facility. In Tamil Nadu, these services are mainly provided by the private sector who are largely unregulated or partly regulated across cities and towns in the State.

### 2.4.1 Regulation of Septage Transportation Operators

Local Bodies shall support, regulate, and monitor private operators and other non-Local Body operated vehicles providing services within their municipal limits.

#### 2.4.1.1 Licencing

i. The Local Bodies shall call for applications from private Septage Transportation Operators offering services for the collection and transportation of FSS from all buildings, whether residential, commercial or institutional. The Septage Transportation Operator shall submit application along with the licencing fee and required documents. Local Bodies shall scrutinise the application and grant licence to operator as per the terms and conditions detailed in Annexure 4.
ii. Only registered Septage Operators shall be allowed to de-sludge septic tanks/pits and transport FSS to the designated disposal facility.
iii. Local body clusters have been identified for safe disposal and treatment of collected FSS at earmarked STP and FSTP locations. All Septage Transportation Vehicles should be directed to transport septage to the designated disposal facility as given in Annexure 4.
iv. Local Bodies shall publish the list of registered Operators from time to time along with grievance redressal mechanism to report any violations by Operators.

#### 2.4.1.2 Decantation Fee

Local bodies shall collect a nominal decantation fee from Septage Transportation Operators to encourage disposal at designated facilities. Local bodies can adopt any fee collection mechanism based on their requirements. Potential options include but are not limited to:

i) Advance Payment: Decantation fee is paid in advance at the municipal office for a fixed number of trips and a receipt is issued.

Verified by RedEstate

ii) On-spot Payment: Decantation fee is collected upon every visit/usage of the disposal facility. A receipt shall be issued acknowledging the amount paid.

iii) Lump-sum Payment: In select cities/towns where there is high usage of disposal facility, the Local Body can prescribe a lump sum amount towards decantation fee based on the average number of disposal trips made by Septage Transportation Operator.

After desludging of septage from premises, this has to be transported to the approved treatment site designated by the Local Bodies for safe disposal or reuse. The septage transporter is primarily responsible for the safe transport of septage. The Local Bodies shall need to ensure that handling, transport and disposal are in compliance with all existing acts, rules, regulations, guidelines issued by the Government of Tamil Nadu from time to time and any other rules, by-laws enacted by the local bodies.

### 2.4.2 Transportation Plan

To ensure safe transportation of septage, the septage transporter in consultation with Local Bodies shall prepare a transportation plan which shall include:

(a) Scheduling and routing for trucks

(b) Customer service protocols

### 2.4.3 Responsibility of Septage Transporter

The septage transporter shall ensure that:

(a) the registered septage transport vehicle including all equipment used for the transport of septage shall have a leak-proof body and lock to secure the septage; comply with applicable standards and must be able to withstand a collision with another vehicle or any permanent structure;

(b) the tank and equipment used to transport septage shall not be used for the transportation of any other materials or liquids;

(c) the vehicles used to transport septage shall be equipped, at all times, with spill control or absorbent materials and disinfectant materials such as lime or chlorine bleach;

(d) the company name, contact number, company logo, and body number of the septage transportation vehicle are displayed on both sides of the vehicle. The information shall be marked using permanent and legible lettering at least 3 inches high and of reflective material;

(e) list of emergency contact numbers is pasted at the prominent place in all vehicles involved in septage transport;

(f) most competent trained drivers are employed for transportation of sludge and septage;

(g) each worker either engaged by ULB/parastatal body or private agency must have received training on safe disposal methods of septage as well as appropriate usage of PPEs. The workers must wear a proper uniform with company logo on dress and hold identity cards;

(h) the vehicle involved in transportation is cleaned and washed inside as well as outside after every shift; the vehicles and equipment shall be serviced, and greasing, oiling, minor repairs, etc. are done at least twice a month;

(i) the database of the Local Bodies is updated through mobile applications or reporting systems once the septic tank is cleaned.

Verified RealEstate™

The septage transporter shall retain the documentation relating to all stages of septage management i.e. desludging and transportation for a minimum period of 5 years.

The septage transporter shall retain licence related documentation permanently and shall present such documentation on request by an authorised official.

### 2.4.4 Septage Transportation Procedure

- All the septage transportation vehicles shall be directed to transport septage to the designated treatment sites. Movement of vehicle without a valid licence by the Local Bodies shall attract fine and/or even seizure of vehicle.
- Prior to starting of journey, the driver shall ensure that the vehicle is well equipped with spill control or absorbent materials and also disinfectant materials like lime and chlorine bleach.
- The driver of the vehicle shall take the most convenient and congestion free route considering traffic flows and plan the trip to arrive at the treatment site within the specified operating hours.
- While transporting septage, the driver and worker shall ensure that there is no discharge or emptying of septage into locations other than designated treatment sites and without a septage manifest form.
- At Disposal site the truck must be parked in such way that the septage may be directed to the inlet chamber with one length of hose, wheels need be checked and parking brakes need to be placed properly, then the valves be operated and septage allowed to flow by gravity into the collection chamber.

### 2.4.5 Spillage

In the event of spillage of sludge/ septage, the septage transporter shall:

(a) Immediately take action to contain the sludge/septage, minimize the environmental impact, and begin clean-up procedures

(b) Disinfect the area of spillage by sprinkling bleach solution or lime to the area and washing it with water after 15 minutes

(c) Notify the Local Bodies authority immediately

In the event that a septage transporter fails to perform clean-up operations, the Local Bodies shall perform the clean-up and charge all the related expenses incurred to the septage transporter including applicable fines and penalties.

### 2.4.6 Affordable Desludging Services and Approach for Bulk Generators

#### 2.4.6.1 Affordable Desludging Services

Local bodies may need to adopt measures to ensure that desludging services are affordable for urban poor settlements. For this purpose, the Local Bodies can undertake a survey to assess the demand for desludging services in urban poor settlements in their municipal limits. Depending on the nature of the demand, Local Bodies may provide affordable desludging services either through its own septage transportation vehicle (where available) or empanel operators to provide desludging services targeting urban poor settlements at rates lower than the prevailing market rate per load.

#### 2.4.6.2 Approach for Community Toilets and Public Toilets

Local Bodies are responsible for the O&M of CT/PTs and should encourage the private sector and / or the NGO / SHG community to be involved in the operation and maintenance of community and public toilets, with potential financial support from Local Bodies.

Local Bodies shall ensure that all the CT/PTs within its limits are periodically de-sludged. For this purpose, Local Bodies shall prepare a schedule for emptying of CT/PTs based on usage and type of containment.

The Local Bodies may adopt any one of the following approaches to implement the schedule

i. Local Bodies having their own vehicle(s) shall follow the schedule prepared. Records are to be maintained for tracking and monitoring completion of the de-sludging schedule.
ii. Local Bodies may engage or issue a contract to a private septage transportation operator for the purpose of periodic desludging of CT/PTs. The private operator shall follow the schedule and maintain the related records and submit them to the Local Body periodically.
iii. Where the O&M of the CT/PTs have been contracted out to a third-party service provider, the Local Body shall instruct the service provider to undertaking periodic de-sludging as per schedule and maintain records for the same.
iv. Provision for emergency desludging shall also be made.

Similar approach can be adopted for municipal, and government owned or managed buildings where periodic de-sludging is to be carried out. The types of buildings/properties are but not limited to educational institutions, hostels, healthcare centres, hospitals, community halls, office buildings, and housing quarters including slum tenements.

#### 2.4.6.3 Approach for Other Bulk Generators

i. Local Bodies shall conduct surveys to determine the number of properties (Residential / Commercial / Institutional) that could be classified as bulk generators of faecal sludge and septage where more than 100 water closet users per day are present.
ii. For other buildings or properties, the occupier or owner shall undertake measures as necessary to improve the existing containment structure along with implementing appropriate mechanism for safe disposal of effluent within the site. Wherever improvements cannot be carried out due to constraints, the owner or occupier shall undertake periodic desludging of the on-site containment system based on usage and size, maintain related records, and make them available to the Local Bodies upon inspection.

#### 2.4.6.4 Monitoring Bulk Generators

i. Local Bodies shall issue notices as necessary where buildings/properties have reported not to have de-sludged for a long period of time.
ii. Local Bodies shall issue notices as necessary where buildings/properties classified as bulk generators have reported not to have an appropriate mechanism for safe disposal of faecal sludge and septage within the site.
iii. Local Bodies shall ensure suitable complaint and redressal mechanism to report violations under the Prohibition of Employment as Manual Scavengers and their Rehabilitation Act, 2013 (Central Act 25 of 2013), such as forced entry into on-site containment systems.

Verified RealEstate

iv. Local Bodies to gather information to identify unsafe disposal spots and taking measures to enforce penalties as necessary.
v. Conduct regular meetings with private operators to stress the importance of safe collection, transport, and disposal as well as address issues if any.

## 2.5 Treatment and Final Disposal

The main objective of treatment is to enable safe disposal or reuse of FSS[4] and sewage from non-networked and networked systems at designated treatment facilities as specified in Annexure 5 and 6 and by the designated authority from time to time.
In 2018, the GoTN adopted the State Investment Plan (SIP) for state-wide scaling of treatment facilities. The plan was formulated to estimate the investment required to ensure full coverage of treatment facilities across all ULBs through a phased approach. Phases I and II focused on co-treatment while Phase III, IV and V focused on creation of standalone FSTPs in ULBs that did not have STP coverage.

To achieve the key principle of scaling access to treatment facilities, the SIP used two core principles: 1) optimal utilisation of existing treatment facilities through co-treatment of septage with sewage; and 2) adoption of a cluster approach, wherein ULBs within 10 km radius of the existing or new treatment facility are clustered for sharing treatment facilities.

These core principles optimise investment and resources required to scale treatment. The cluster approach also provides opportunities for convergence of efforts from different administration boundaries (rural-urban). This section will detail out the treatment technologies and process of construction, operation and management of the different treatment facilities across Tamil Nadu.

### 2.5.1 Discharge Standards

Treatment systems should be designed and operated to meet the discharge standards as specified by regulatory authorities such as TNPCB and CPCB. In the absence of specific standards (e.g., for biosolids), other standards or guidelines from United States Environmental Protection Agency (USEPA) and World Health Organisation (WHO) could be considered.

**Table 2. 1: Effluent Discharge Standards**

| S. No | Industry | Parameters | Standards (Applicable to all mode of disposal) | | | |
|---|---|---|---|---|---|---|
| 1 | Sewage Treatment Plants (STPs) | | Mega and Metropolitan Cities | Class I Cities | Others | Deep Marine Outfall |
| | | **pH** | **5.5-9.0** | **5.5-9.0** | **5.5-9.0** | **5.5-9.0** |
| | | Bio-Chemical Oxygen Demand (BOD) | 10 | 20 | 30 | 30 |
| | | Total Suspended Solids (TSS) | 20 | 30 | 50 | 50 |

[4] The characteristics of FSS should be taken into consideration by local bodies when planning, designing and operating treatment systems. FSS contains high concentration of Total Solids (TS) content and may have high levels of Biological Oxygen Demand (BOD) / Chemical Oxygen Demand (COD), and pathogens. FSS characteristics are typically higher by a factor of ten to hundred when compared with wastewater and can vary significantly from place to place.

| | | | | | | |
|---|---|---|---|---|---|---|
| | | Chemical Oxygen Demand (COD) | 50 | 100 | 150 | 150 |
| | | Nitrogen - Total | 10 | 15 | - | - |
| | | Phosphorus-Total (For Discharge into Ponds, Lakes) | 1 | 1 | 1 | - |
| | | Faecal Coliform (FC) (Most Probable Number per 100 millilitre, MPN/100 ml | Desirable - 100 Permissible – 230 | Desirable - 230 Permissible – 1000 | Desirable - 1000 Permissible – 10,000 | Desirable - 1000 Permissible – 10,000 |

**Note:**
(i) Mega-Metropolitan Cities have population more than 1 crore, Metropolitan Cities-Population more than 10 Lakhs and Class-1 Population more than 1 Lakh.
(ii) All value in mg/l except for pH and Faecal Coliform.
(iii) These standards will be applicable for discharge into water bodies as well as for land disposal/applications.
(iv) These Standards shall apply to all new STPs for which construction is yet to be initiated.
(v) The existing/under construction STPs shall achieve these standards within 07 years from the date of notification.
(vi) In case where the marine outfall provides a minimum initial dilution of 150 times at the point of discharge and a minimum dilution of 1500 times at a point 100m away from discharge point, then norms for deep sea marine discharge shall be applied.
(vii) Reuse/Recycling of treated effluent shall be encouraged.
(viii) State Pollution Control Boards/Pollution Control Committees may make these norms more stringent taking into account the local conditions.

The Table 2.1 provides applicable standards for liquid effluent from CPCB and TNPCB, and standards for biosolids from WHO and USEPA.

**Table 2. 2: Standards for Bio Solids Reuse**

| Parameters | Values | Remarks | Source |
|---|---|---|---|
| Faecal coliforms | < 1,000 MPN/g TS | Class A Biosolids | USEPA, 1993 |
| | < 2,000,000 MPN/g TS | Class B Biosolids | USEPA, 1993 |
| Salmonella spp | 3 Most Probable Number (MPN)/g TS | Class A Biosolids | USEPA, 1993 |
| | < 2,000,000 Colony Forming Units (CFU)/g Total Solids (TS) | Class B Biosolids | USEPA, 1993 |
| Helminths | <1 no of egg/L | For treated effluent used for vegetable irrigation | WHO, 2006 |
| | <1 no of egg/g TS | In faecal sludge post treatment | WHO, 2006 |
| Class A: When prepared for sale or give away and passes on to the user for land application or producing other product<br>Class B: Pathogen reduction for land application and surface disposal | | | |

There are possibilities of trucks carrying wastes from other sources such as industries to the designated decanting facilities and this can be avoided by following the screening procedure provided.

### 2.5.2 FS Screening Procedure

**FS Sampling**

- The sample shall be collected from the outlet valve or from any other outlets provided in the desludging truck. When collecting from the truck outlet valve, the operator shall allow the flow to become low (or one fourth of the valve opening), before sample collection to avoid splashing.

- A bucket with 5-liter capacity can be used for sample collection. A grab sample shall be collected from every truck. Pour the sample collected in the bucket into a smaller container for convenience; approximately 50 mL is needed for testing. The same sample can be used for testing both pH and Electrical Conductivity (EC).

- The sampling personnel shall avoid direct contact with FS and must use Personal Protective Equipment (PPE) like safety shoes, safety goggles, mask and hand gloves.

- Hand-washing facility and 24/7 water availability shall be ensured at site.

- After testing, the sample shall be disposed safely.

**Testing procedure**

The samples collected shall be observed for Colour, Odour, and Temperature; and tested for pH, and Electrical Conductivity (EC). The items needed for testing is presented below.

1. Electrical conductivity analyzer
2. pH paper strips
3. De-mineralized water for washing

The well-mixed sample is tested for pH and EC as per the procedure below:

**PH:**

- Dip one end of the pH paper strip into the sample.
- After a few seconds, remove the paper and compare the Colour of the pH paper strip to the Colour chart provided with the pH paper kit to determine the pH range.
- Dispose the used pH paper strips appropriately.
- **Do not re-use a pH paper to retest or test another sample.** Always use a new pH strip for every sample.

**EC:**

- Remove the cap and press power button ( ) to turn on the tester.
- Dip the sensor into the sample; sensor should be fully immersed in the sample.
- Stir the sample with sensor, once or twice to stabilize the reading; Note down the displayed value.
- Hold function: Hold function freezes reading temporarily for ease of recording. To hold reading, press hold/Ent ( hold ent ) button. Screen flashes HC once, then displays measurement with blinking unit (mS) to indicate that the tester is in the hold mode. Press again to cancel hold mode ( HO ).
- **Don't press Cal button during measurement.**
- **Refer to the manual if required for trouble shoot or other details.**
- Rinse both the beaker and sensor with demineralized water twice and dry using tissue paper.

Verified RealEstate

- Take adequate care not to cross-contaminate the samples. This can be done by cleaning and drying (using soft tissue paper) the sensor and sampling container for each sample taken.
- Press power button ( ) to turn off the tester.

**Interpretation of test results**

Guidance for interpreting the observation and test results is provided in Table below.

**Table 1: Guidance for interpreting the test results**

| S.No. | Parameter | Guidance |
|---|---|---|
| 1 | pH | pH in the range of pH 6 to 8 shall be accepted; pH outside this range shall be further investigated for the source of waste. |
| 2 | Electrical Conductivity (EC) | Typical values of EC for Faecal Sludge ranges from >0 to 6 mS. EC of Faecal Sludge shall be referred and compared with the EC of water used by the households. Typical values across Tamil Nadu ranges from 0 to 4 mS. It is suggested to check the source of waste for those samples with high EC (> 3mS) and cross-check with other tests or observations for further confirmation. (pH, colour, odour). |
| 3 | Colour | Typical colour of fresh sludge is yellow/green/ brownish; anaerobically digested sludge is black; Wastes from dyeing industries, tanneries, metal plating industries may have red, blue, etc. Further check on the source of waste is suggested if the colours are unusual. |
| 4 | Odour | Typical smell of domestic FS is that of rotten egg; whereas smell of waste from other sources such as industrial solvents like turpentine (paints), ethanol (perfumes), ethyl acetate (Glues) etc. shall be further checked for the source of waste. |
| 5 | Temperature | High temperature wastewater released from processing industry, coolant water from condensers and boiler blow-down shall be rejected. |

*Note: The data Validation shall be carried out as per the site condition*

This will minimize adverse effects on the plant performance. Local bodies should also explore other options to ensure industrial waste is managed as per relevant regulations.

### 2.5.3 Enabling Co-treatment of Septage at STPs

Co-treatment requires addition of FSS either at the STPs, with or without retrofits, or at specific decanting stations which are usually located at Sewage Pumping Stations (SPS). At present, there are 70 operational STPs in Tamil Nadu of which 35 STPs are practicing co-treatment (Refer to Annexure 5 for complete list).

Co-treatment of FSS at STPs shall be given priority and local bodies shall follow to co-treatment as per the cluster list is provided in Annexure 6.

All new STPs should be designed to co-treat FSS.

### 2.5.4 Decanting Facility Design

#### 2.5.4.1 Components of Decanting Station

**Screen Chamber**:

A screen is a device with openings generally of uniform size for removing bigger suspended or floating matter in sewage. The screening element may consist of parallel bars, rods, gratings or wire meshes or perforated plates and the openings may be of any shape although generally they are rectangular screens. These systems trap the floating matters like sachets, plastic milk packets, grocery bags, etc., which otherwise can lump in the impeller. Screens are used ahead of pumping stations, meters and as a first step in all treatment works. Clogging and corrosion are the most commonly occurring problems in the screens. Routine cleaning and inspection will avoid these problems. Bar screens are usually hand cleaned and sometimes provided with mechanical devices.

Location of Screens: Screening devices are usually located where they are readily accessible because the nature of materials handled requires frequent inspection and maintenance of the installation. Where screens are placed in deep pits or channels, it is necessary to provide sufficiently wide approaches from the top and ample working space for easy access and maintenance. Provision should be made for the location of penstocks and bypass arrangements for the screens.

**Disposal of Screening:**

The methods of disposal of screenings could be burial or composting. The screenings should not be left in the open or transposed in uncovered conveyors as it would create nuisance due to flies and insects. If conveyors are used, they should be kept as short as possible for sanitary reasons. Burial in trenches usually 7.5 cm to 10 cm deep is practiced particularly in small installations. At large works, where sufficient land for burial is not available within a reasonable distance from the plant, screenings shall be transported and mixed with town refuse for production of compost.

**Grit chamber:**

Grit includes sand, gravel, cinder, or other heavy solid materials that are “heavier” (higher specific gravity) than the organic biodegradable solids in the wastewater. Grit also includes eggshells, bone chips, seeds, coffee grounds, and large organic particles, such as food waste. Grit shall be removed at the sewage pumping station to safeguard the same from causing wearing of the pump impeller and inside of pumping mains. The grit well shall be an independent well upstream of the wet well. A reliable grit removal system shall be a simple submersible pump set. The pumped grit is collected in the Grit pit located very nearer to the grit chamber, once the water dried the dried sludge will be collected and safely conveyed to the disposal site. Grit must be removed from the chamber on equal intervals, typically once in a week, dewatered, washed, collected and conveyed to a disposal site.

Verified RedEstate

**Pumping well:**

A pumping well is made up of a large tank, known as a wet well, that acts as the receiver for screened sewage. Pumps which are installed in the wet well shift the sewage to the treatment location. Typically, the Centrifuge pumps with required capacities are installed in most of the pumping stations.

The design of two types of septage receiving facilities that can be installed in the Main Pumping Station (Type 1) and at the Sewage Treatment Plant (Type 2) are provided in Annexure 7.

All STPs (proposed or practicing co-treatment or to initiate co-treatment) should have decanting facility to accept FS. Decanting facility should be designed based on expected volumes of FSS generated in local body clusters and should also have adequate capacity for the next five years. Quantity of FS addition to the STP is decided based on the characteristics of sewage, septage and STP utilization, and can be derived from the graph below. Addition of the FS can be increased after reviewing the STP performance while practicing co-treatment.

**Figure 2. 2 Allowable Septage Loadings to a Sewage Treatment Plant having Septage-holding tank**

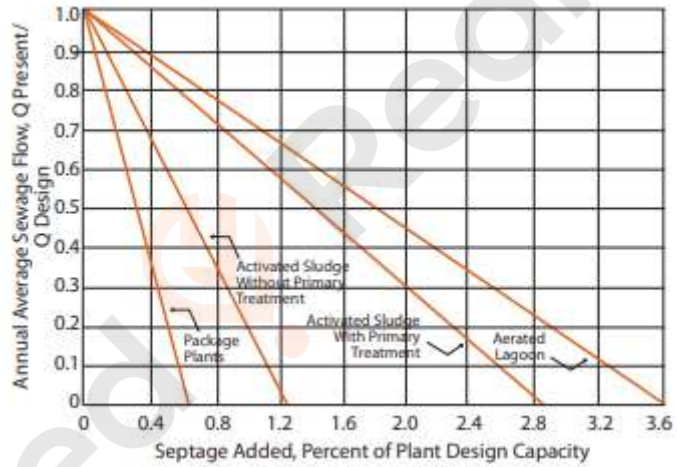


Source: U.S. EPA, 1984

If STPs are loaded to full capacity, then the need for a pre-treatment facility should be explored by local bodies before allowing additional loads for co-treatment.

Local bodies should consider the following while planning for co-treatment:

1. Adequate residual capacity at the STP.
2. Access for decanting by desludging vehicles and safe decanting operations.
3. Availability of pre-treatment such as screening and grit removal.

A checklist to assess the feasibility co-treatment is provided in Annexure 8.
Other critical elements for efficient implementation of co-treatment include:

- Building the capacity of desludging operators, plant manager(s) and field level staff.
- Strengthening O&M arrangements (a detailed checklist for O&M process is provided in Annexure 8).

Verified by RegiEstate

- Streamlining processes including establishing clarity in roles and responsibilities at the Local Body level to ensure sustainability of operations.

### 2.5.5 Faecal Sludge and Septage Treatment

Dewatering (or solid liquid separation) of FSS is an important step which simplifies the subsequent treatment processes. The dewatered solids can be co-composted for further stabilization and pathogen reduction. The liquid stream can be treated using conventional gravity based or mechanical FSTP systems that meet the TNPCB standards.

Local bodies should adopt FSTPs where co-treatment is not feasible, as per the Cluster List provided in Annexure 6.

The following aspects should be considered by Local Bodies in the planning, design, implementation, and O&M of FSTPs:

- Proposed Capacity: Capacity to be determined using FS generated in the Local Body or Cluster (refer Annexure 9 for details on FSTP sizing). Due to uncertainty associated with data on generation, a modular approach is suggested, i.e. incremental addition of capacity.
- Capital costs and funding availability
- Site selection by taking into consideration land area and layout of the site and securing land by following due process.
- Site assessment for suitability of technology covering site conditions such as slope, soil bearing capacity and depth to groundwater table (Refer to Annexure 10 for details)
- Quality assurance as per design and standards
- Design and DPR preparation (few designs options are provided below)
- Technical and administrative sanctions
- Obtaining Consent to Establish and other relevant permissions from regulatory authorities
- Procurement process
- Monitoring and reporting as per PCB requirements
- End-use or disposal option of treatment products

### 2.5.6 FSTP Technology Options

**Technology Options for FSTP**

Two technologies have been adopted for FSTPs in Tamil Nadu: Biological treatment and Mechanical treatment.

***Biological Treatment System***

In Biological treatment there is a screen chamber for screening of municipal waste and large solid particles, stabilization reactor for the homogenization, degradation of organic matter and increased de-waterability of sludge before the sludge drying bed and an integrated settler and anaerobic filter for the primary and secondary treatment of percolate before the horizontal planted gravel filter for tertiary treatment of percolate.

Verified by RealEstate

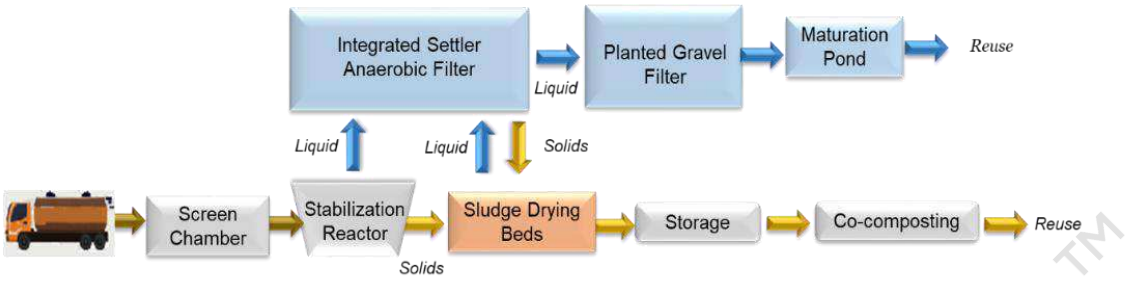


**Figure 1: Process flow diagram of ~~Biological~~ biological treatment technology**

The treatment process listed in Part 1 (Table 2.5) will ensure removal of grit and debris, homogenization, solids-liquid separation and stabilization of the FS prior to dewatering. The Part 1 includes a screen chamber as a preliminary treatment unit, followed by the Stabilization Reactor (anaerobic digestion of FS). The stabilization reactor reduces the load on the dewatering unit, by acting as a solid-liquid separator. The Part 2 of the treatment process includes dewatering, which is a gravity-based system. Part 3 processes are for the liquid treatment including, a Settler and Anaerobic Filter, Horizontal Planted Gravel Filter (HPGF) and Maturation Pond (MP).

**Table 1: Process for FSTPs**

| No. | Treatment steps | Category |
|---|---|---|
| 1 | Screening | PART 1 |
| 2 | Homogenization | |
| 3 | Solid liquid separation | |
| 4 | Solid stabilization | |
| 5 | Solid Dewatering | PART 2 |
| 6 | Primary treatment of liquid for BOD reduction | PART 3 |
| 7 | Secondary treatment of liquid for nutrient reduction | |
| 8 | Tertiary treatment of liquid for pathogen reduction | |

***Mechanical Treatment System***

In mechanical treatment there is a septage receiving station (SRS) that screens municipal waste and large solid particles from the septage, a storage tank to store septage in four chambers fitted with submersible sludge pumps, from the first three chambers the septage is pumped to the sludge holding tank and from fourth chamber it is pumped to waste water treatment plant (as it is mostly liquid) and a dewatering unit, which has a polymer dosing (a polymer flocculent (Organic Cationic Polymer) is added to enhance the de-waterability of septage), a mixing chamber (enables proper mixing of polymer with septage), a thickening and pressing chamber (screw press / volute press separates out the liquid from the sludge). In addition, there is a Moving Bed Biofilm Reactor (MBBR) which treats the overflow from storage tank, and the filtrate from screw/volute press (tertiary treatment module and

disinfection unit) and treated water tank which stores treated water for irrigation of landscape area within the treatment plant.

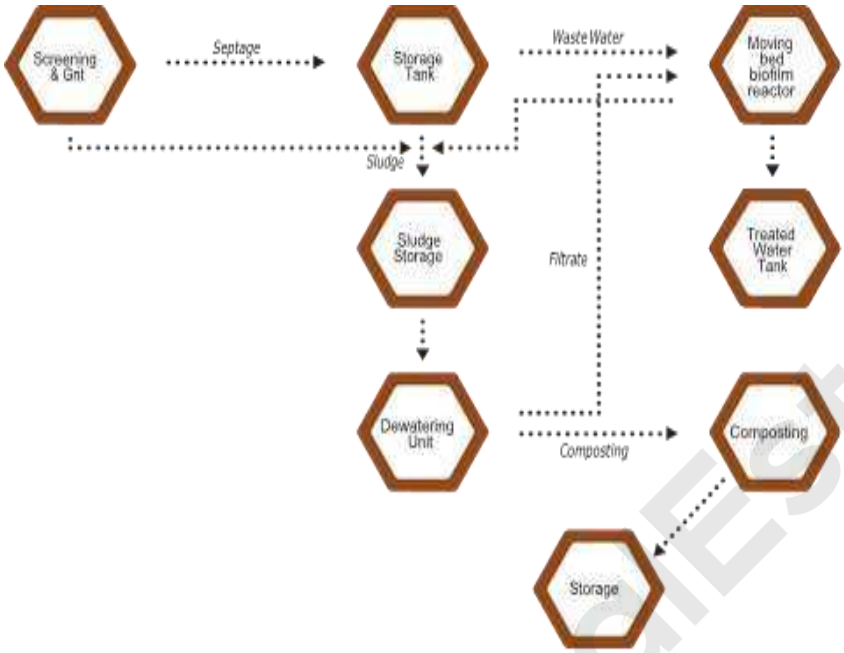


**Figure 2. 2 Process flow diagram of Mechanical treatment technology**

### 2.5.6.1 O&M Arrangements

The O&M of FSTPs shall be the responsibility of the Local Bodies. The responsibilities of the Local Body shall include but not be limited to the following:

- Adoption of standard protocols and safe operation assurance (protocols for gravity-based type design are provided in Annexure 11).
- Obtaining Consent to Operate and other permissions from regulatory authorities.
- Adoption and execution of the Memorandum of Understanding (MoU) as per Government Order (G.O (2D) 35) dated 15.05.2020 (detailed responsibilities of the key stakeholders as per the MoU are provided in Annexure 12).
- Appointment of Local Body personnel or concessionaire to undertake the O&M of the FSTP. Local Bodies can train and appoint Local Body personnel from relevant department(s) to operate and maintain the FSTP or contract the O&M to concessionaires such as self-help groups, non-government organizations and private enterprises. There are various O&M models that Local Bodies can adopt, including but not limited to the following:
    - Public-Private-Partnerships
    - Bundling service contracts of multiple FSTPs
    - Bundling service contracts of:
        - FSTP construction and O&M; OR

- FSTP O&M and Solid Waste Management

- Financing O&M costs including levying user charge or as an alternative utilizing a proportion of the water and sanitation (W&S) tax collected by Corporations / Municipalities or consider viability gap funding options. Local Bodies should consider options to generate revenue from reuse of treated products.
  The Government Order – G.O. (2D) 35, MAWS (MA3), dated 15.05.2020 – provides Local Bodies with FSTPs the right to recover costs of operating and maintaining these facilities. It establishes a rule and process by which O&M costs can be shared between the local bodies served by a common FSTP, and safeguards funds collected, or revenues generated through a ring-fenced account.

Currently, there are 16 operational FSTPs, details are summarized in the Annexure 5.

### 2.5.7 Reuse

#### 2.5.7.1 Treated Water

The treated water from the treatment facilities should effectively cater to industrial or agricultural demand, thereby enabling sustainable optimized use of naturally available water resources. All existing and upcoming wastewater treatment plants under the ULBs/ Chennai Metropolitan Water Supply and Sewerage Board (CMWSSB) shall consider provision subject to availability of appropriate funding mechanism for advanced treatment infrastructure subject to demand on a sustainable basis. It is recommended to refer the Treated Wastewater Reuse Policy for Tamil Nadu to facilitate the implementation of feasible treated wastewater by various stakeholders.

#### 2.5.7.2 Dried solids

The FSS obtained from the treatment modules should be treated using the treatment technologies such as sludge drying beds or mechanical volute press and the dried solids should be used for agricultural purpose by co-composting it with organic waste. Dewatered sludge could be mixed with grounded organic municipal solid waste and could be used as a good soil conditioner (compost). It is recommended that Local Bodies follow CPHEEO guidelines[5] on solids for various parameters to be considered when it is used for different applications. Local Bodies should generate awareness on reuse of dried solids among local communities.

## 2.6 Behaviour Change Communication and Capacity Building

### 2.6.1 A Behaviour Change and Communication campaign for FSM

To promote a positive behavior, change towards sanitation, a state-wide campaign featuring a sanitation mascot, namely ‘Kakkaman’ or (Shit-man) will be used to take key messages on FSSM to the people of the State. The campaign will introduce the concept of FSSM, urging various stakeholders to think beyond ‘toilets’. It will be designed to inform the people about the upcoming treatment facilities near them, the importance of their functioning and usage, including a joint call to action to take part in the BCC campaign. The designated authority will design the campaign materials, plan, and roll out through the respective Local Bodies.

| Table 2. 3: Key Stakeholder Messages | | |
|---|---|---|
| **No** | **Stakeholder groups/ Target audience** | **Key Messages** |
| 1. | Municipal officers, municipal council, and elected representatives | Facilitate safe sanitation for all stakeholders<br><br>Ensure implementation of septage management regulations |
| 2. | Septage transportation operators, Sanitation workers | Disposal of FSS at the designated disposal facility<br><br>Usage of protective gear in the desludging process.<br><br>Licencing with the ULBs |
| 3. | Masons, construction workers, contractors | Construction of septic tank and sanitary toilets as per standards |
| 4. | Household / RWA/ Establishments/ Institutions | Proper construction, maintenance, and periodic emptying of septic<br><br>Prevent disposal of faecal sludge into open land and water bodies |
| 5. | Treated product end users | Usage of treated faecal sludge for agriculture purposes. |
| 6. | NGOs/ SHGs/ CBOs | Ensure inculcation of behaviour change among the stakeholders in FSSM chain |

### 2.6.2 Engagement Modes with Various Stakeholders Across the Full Chain of Sanitation: Municipal Officers, Municipal Council, and Elected Representatives

Municipal Commissioners, Engineers, Sanitary Inspectors, Health Officers and Elected Representatives should be regularly trained in safe septage management and its best practices. This involves regular training sessions on safe collection, treatment, disposal and O&M of the facilities. Through these training sessions, they must also be sensitized on making septage management facilities as well as the service delivery inclusive. Training should also be provided on safety standards. In this regard, the designated authority will design the course material and draft a calendar for training.

Information on standard septic tank design, the need for periodic inspection and de-sludging of FSS, design of disposal facilities, design of inclusive toilets and other infrastructure facilities, tender details for engaging registered operators, etc. should be disseminated widely to achieve a safe septage management system. The designated authority will produce the IEC material.

Verified RealEstate ™

### 2.6.3 Households, Resident Welfare Associations, Establishments, and Institutions

Members of Resident Welfare Associations, community organizers, key representatives from institutions and commercial establishments, self-help groups and the public should be sensitized periodically regarding the need for a sound septage management system. The health risks associated with poor containment systems, improper collection and treatment of waste, and the ill-effects of septage discharge into fresh water or storm water drains, should be clearly explained to the residents.

A Citizens Monitoring group with the above-mentioned stakeholders will be formed for participatory monitoring and accountability. The designated authority will produce sample IEC material. The Local Bodies will roll out the 'Kakkaman' behaviour change campaign with targeted messaging for these stakeholders as well as monitor the campaign.

### 2.6.4 Septage transportation operators and sanitation workers

Private Operators and Transporters should be well trained in safe collection and transportation of sewage including vehicle design, process of de-sludging, safety gears and safe disposal at the nearest designated disposal facility. The designated authority will draft a tentative training calendar for septage operators and sanitation workers.

Local bodies should ensure all safety norms are clearly explained to the sanitation workers. The designated authority will produce consolidated documents on health, welfare, and social security for the workers. The Local bodies will roll out the 'Kakkaman' behaviour change campaign for the sanitation workers with specific messaging as well as monitor the campaign. Specialized health camps must be organized for the sanitation workers periodically.

### 2.6.5 Construction Workers and Contractors

Masons should be trained on proper ways to construct sanitary toilets and septic tanks to meet standards mentioned in the TNCDBR, 2019. Masons, contractors, and builders must be informed about the options to upgrade insanitary holdings, septic tanks, and pits. FSTP construction contractors must be trained on the construction schedule, quality assurance processes for materials and methods to meet prescribed standard and to ensure the safety of construction workers on site. Contractors must be trained on the proper O&M of the FSTPs. The designated authority will prepare the course material as well as draft a tentative training calendar for masons and contractors.

Local bodies should ensure all relevant safety norms are clearly explained to the construction workers and contractors.

### 2.6.6 Treated Product End-Users

Farmers should be sensitized periodically regarding the ill effects of using untreated waste as manure in the fields. Farmers and allied businesses should be clearly explained the potential of using treated water and faecal waste as manure. Citizens should be sensitized on using treated water and the manure from faecal waste by removing the associated stigma.

Verified@RedEstate

The designated authority will produce consolidated IEC material on reuse. The Local bodies will roll out 'Kakkaman' behaviour change campaign on 'safe disposal of septage as an attractive business' for this target group.

### 2.6.7 NGOs/SHGs/CBOs

Civil societies should be identified, empaneled, and sensitized periodically on FSSM, safe practices along the chain and must be enabled to take key messages to the citizens. Through these training sessions, they must be developed as master trainers to train septage transportation operators, masons, contractors on the relevant topics. They must also be trained to support the Local bodies in the roll out of the 'Kakkaman' behaviour change campaign.

### 2.6.8 Treatment Facilities as Resource Centres

FSTPs, STPs and Decanting Stations can be positioned as 'resource centers' to learn about FSSM. Posters, wall paintings and hoardings depicting the information about the facility, full sanitation chain and key messages for occupational safety, health, and welfare of the sanitation workers will be prepared by the designated authority. They will be installed in the sites by the local bodies.

### 2.6.9 Engagement of NGOs, SHGs, Civil Societies

**Table 2. 4: Engagement of NGOs, SHGs, Civil Societies**

| Sanitation Processes | Roles and responsibilities of NGOs, SHGs, Civil societies |
|---|---|
| Awareness creation for FSSM | Actively engage with communities to create awareness about safe containment, regular and safe emptying and transportation, disposal at designated treatment facilities and reuse of treated water and co-compost. |
| Upkeep of sanitation facilities | Operation & maintenance (O&M) of Community toilets (CT)/Public Toilets (PTs), toilets at treatment facilities, O&M of FSTPs, decanting stations, STPs based on Standard Operating Protocols developed by designated authority |
| Co-composting | Preparation and sale of co-compost at the Resource Recovery Parks and Micro Composting Centres |
| Training of FSSM stakeholders | Develop master trainers to train ULB officers, masons, septage operators and other stakeholders on safe FSSM |

## 2.7 Record Keeping and Reporting

### 2.7.1 Management Information Systems (MIS)

Information related to faecal sludge and septage generation, collection, transportation and disposal from residential properties, commercial establishments and institutional buildings, community and public toilets needs to be collected and maintained by the Local Bodies (refer to Annexure 15). The information should comprise of spatial and non-spatial data, and this can be used for carrying out analysis, visualising data through maps and showing trends over a period of time. This shall include the following categories of data and information.

Verified RedEstate™

#### 2.7.1.1 Access and Containment

i. Across the city or town, details of all buildings/properties used for residential, commercial and institutional purposes including public and semi-public uses, the type of on-site sanitation system including effluent disposal arrangement, desludging frequency, last desludged date along with insanitary latrines if any

#### 2.7.1.2 Emptying and Transport

i. Septage Transportation Operators - Operator name, Owner name, Vehicle Details, parking information along with licence status.

#### 2.7.1.3 Disposal, Treatment and Re-use

i. Information on safe disposal of faecal sludge and septage including the records related to usage of disposal facilities by operators and decantation fee payment.
ii. Operational information related to safe treatment of faecal sludge and septage including quality and quantity of treated products, re-use and revenue generation if any.

#### 2.7.1.4 Sanitary Workers

i. List of Sanitary Workers involved with Liquid waste along with contact information – Septage Transportation Workers, STP / FSTP Operators
ii. Record of training conducted on safety and welfare.
iii. Status of linkages to welfare schemes.

GIS is a useful tool to analyse spatial data and can be used for generating ward level maps of properties for tracking desludging status and could be used for targeted communication. It plays an important role in Septage transportation operations by helping optimise the routing of Septage Operators vehicles to cover maximum properties.

### 2.7.2 Web / Mobile Based Monitoring and Tracking

Web/Mobile applications and tools have multiple use-cases in the sanitation value-chain including but not limited to:

i. Online citizen facing service for desludging where citizens can place request for services to ULBs who in turn can service requests either on their own or through empanelled operators. E-acknowledgement can be carried out at both citizen's end as well as at the disposal facility thereby closing the loop from request to safe disposal. Stand-alone GPS or mobile phone-based GPS can be used for monitoring operator activity.
ii. Tool for planning and scheduling periodic desludging for property types such as CT/PTs
iii. Mobile based data base maintenance of incoming septage transportation vehicles at disposal facilities. (Included in Annexure 14).
iv. IoT sensor installed at treatment facilities to measure and monitor treatment performance in terms of quality and quantity.

Verified by ResiEstate™

# 3 GENDER, SANITATION AND SANITATION WORKERS

## 3.1 Gender in Faecal Sludge and Septage Management

In the sanitation sector, women have been embraced as consumers and have been in the centre of programming as 'change agents' or torchbearers of household and community sanitation. However, women do exist as service providers and users across the full chain. Many of these women are sanitation workers. Women's agency must be strengthened along the sanitation chain, in alignment with the provisions under SBM 2.0 and AMRUT 2.0.

### 3.1.1 Access to facilities

The designated authority must ensure access to gender-friendly toilets for women, children, the elderly, and persons with disabilities. Gender friendly toilets must include sex-disaggregated sections ensuring safety and privacy of users, designated seats for children, bigger cubicles for persons with disabilities, elderly-friendly facilities like rods and anti-slip flooring, adequate infrastructure including lighting, water supply and address special life cycle needs e.g.: pad vending machines, incinerators, childcare, and breast-feeding space, etc. Equal participation of all genders in the planning and design of sanitation infrastructure will help to generate sensitive designs. The Local Bodies must be encouraged to provide Sex disaggregated restrooms and bathing facilities should for septage transport operators and other sanitation workers in all FSTPs and decanting stations.

### 3.1.2 Operations

The designated authority must be encouraged to identify and encourage women septage transport operators and women entrepreneurs/ SHGs through reservations while issuing the desludging licence and work orders for O&M of treatment plants. The Local Body can pilot some standards in this regard to enable at least a fixed percentage of women professionals as drivers of de-sludging trucks, construction workers, staff, engineers, and mechanics at STPs, FSTPs, decanting facilities, pumping stations, and SWM plants. It is recommended that Local Bodies can facilitate regular training for identified women/women groups and federations for upskilling and financial linkages to relevant institutions. It is suggested that the designated authority can facilitate the availability of ergonomically designed equipment/tools/vehicles to encourage women to participate in the various operations in FSSM.

### 3.1.3 Accountability

Local Bodies are suggested to encourage the formation of any form of the public forum with equal representation of all genders to raise relevant concerns as well as monitor the FSSM initiatives. Septage transport operator's associations should be encouraged to have women representatives in their governing council.

### 3.1.4 Inclusive Budgeting and Programming

The Local Bodies are encouraged to allocate a certain fraction of municipal budgets for promoting gender integration related to sanitation and adequate budgets for gender training of all Local Bodies and State-level staff.

### 3.1.5 Capacity Building

The designated authority is encouraged to focus on building capacities of different institutions in the sanitation cycle – at the State level and Local Body level for gender-sensitive sanitation planning. Gender can be integrated into sanitation-linked job descriptions, performance appraisal, and training needs assessment. It is recommended to conduct consultative workshops at State and Local Body levels to develop action plans for integrating gender in FSM planning. The designated authority is encouraged to ensure that committees are established to deal with harassment that is sexual, based on caste or any identity at the Local Body level, district, and State levels within sanitation-linked institutions.

## 3.2 Sanitation Workers

In Tamil Nadu, there are different types of sanitation workers, based on their specific work/ roles (e.g., sewer workers, drain cleaners, desludging workers, etc.). and their contractual arrangements (ranging from being on local bodies payroll to self-employment). Local Bodies are encouraged to create enabling environment for the operation of sanitation workers by extending the following supports for all sanitation workers:

i. Provisioning of occupation cards accredited to GoTN for accessing health and social security schemes in line with the various State schemes and government orders for the safety and dignity of sanitation workers. In addition, it should also cover informal sanitation workers.

ii. Occupational safety standards/protocols and training.

iii. First aid training; provisioning of first aid box.

iv. Setting up sanitation workers safety cell at Local Body level.

v. Mandatory periodic health checkups at designated PHC/ CHC/ FRU/ Urban health post, health insurance, and benefit of ESI (Employees State Insurance).

vi. Separate sex-disaggregated toilets with washing and changing facilities within the premises of decanting facilities/FSTPs/STPs. Separate space for recreation.

vii. Linking to various social security schemes through a single-window approach.

viii. Converging with DAY-NULM implementing organisations to ensure that sanitation workers are federated into Self-Help Groups (SHG) and can access Entrepreneurship Development Program (EDP) support to start their own enterprises (sanitation or other sector based) or getting into alternative livelihoods/ enterprise and strengthen linkages with various government departments.

ix. Encouraging the formation of collectives (viz. sanitation workers association etc.) for smoother renewal of licence, availing ESI benefits, etc.

x. Promoting women entrepreneurs in sanitation-based enterprises.

xi. Running a mass awareness campaign on Safe Sanitation: 360-degree campaign to build awareness on sanitation workers, nature of their job, risks and hazards associated with their job how the behaviour of the citizens affects desludging services, and the Prohibition of Employment as Manual Scavengers and their Rehabilitation Act 2013 (Central Act 25 of 2013).

Verified RedEstate™

xii. Valorize the services of the sanitation workers by celebrating them.

xiii. Utilize the premises of the decanting facilities/FSTPs/STPs for disseminating information on:

   a. Contact details of the nearest hospitals, police station, and fire station at decanting facilities/FSTPs/STPs
   b. Various social welfare schemes and health entitlements along with their application methods
   c. Occupational safety and personal protection (preferably near unloading ramp/screen chamber)
   d. Dos and Don’ts for desludging at the source
   e. Dos and Don’ts for emptying at the facility, and
   f. Health impact of drinking and smoking.

Local Bodies are also encouraged to extend the following support to the sanitation workers either on payroll or contracted by them:

i. Designing a simple and effective contract mechanism ensuring the rights and entitlements of sanitation workers.

ii. Provisioning of safety tools, safety gears along with their disposal facility.

iii. Formation of ICC / PoSH Committee and its strengthening at the Local Body level. Displaying the charter with helpline numbers at appropriate locations.

Verified RealEstate™

# 4 INSTITUTIONAL ARRANGEMENTS

The governance and institutional mechanisms need to be strengthened to ensure sustainable FSM service delivery. For this purpose, the following section showcases new processes, roles, and responsibilities to be adopted at the Local Body level or areas of engagement for private sector, NGOs, SHGs, and civil society to ensure comprehensive sanitation service delivery.

## 4.1 Roles and Responsibilities of Sanitation Stakeholders

At the State level, the Municipal Administration and Drinking Water Supply (MAWS) Department, the Directorate of Municipal Administration (DMA), Commissionerate of Town Panchayats (CTP) and Tamil Nadu Water Supply and Drainage Board (TWAD) would be key drivers of FSSM. The Joint Commissioner of Municipal Administration, City Engineer-DMA and Joint Director-CTP supported by key engineering/administrative/managerial personnel, would facilitate timely implementation, and oversee any FSSM-related matters referred up to the State level. At the Regional level, the authorities include Regional Directorate of Municipal Administrations and Local Planning Authorities. These authorities will function as intermediaries between local bodies and the State. They will be involved in the monitoring and supervision of financial and administrative activities, and in the case of smaller local bodies provide additional support in service delivery.

### 4.1.1 Roles and Responsibilities of Public Stakeholders

Table 4.1 below highlights existing sanitation activities undertaken in Municipal Corporations, Municipalities and Town Panchayats and recommends new and modified sanitation or FSM processes and responsibilities. These roles and responsibilities can be incorporated through updating of job descriptions, amendment of appropriate acts and rules or issuance of notice and circulars.

Verified RealEstate™

**Table 4. 1: Roles and Responsibilities of Public Stakeholders**

| Sanitation Processes | Existing Activities | Existing Staff | Proposed Activities | Proposed Staff Municipal Corporation | Proposed Staff Municipalities/ Town Panchayat |
|---|---|---|---|---|---|
| **Building permissions for Residential / commercial / institutional buildings: super and sub-structure** | Approval of building application | Commissioner | Review of design standards of sanitation systems in the building plans against Tamil Nadu Combined Development and Building Rules, 2019 (TNCDBR) | Assistant Executive Engineer - planning / Executive Engineer - planning) | Town Planning Officer/Inspector |
| | Review of building plan | City Engineer/ Junior Engineer | | | |
| | Inspection of building on completion | Assistant Engineer | Toilets and containment systems to be inspected against the TNCDBR, 2019 | Assistant Engineer | Town Planning Inspector |
| **Provisioning of new CT/PT** | Approval for construction of CT/PT | Commissioner/ City Engineer | Toilets and containment systems to be inspected against the TNCDBR, 2019 | Junior Engineer/ Assistant Engineer | Junior Engineer/ Assistant Engineer/ Municipal Engineer |
| | Review of designs, costs submitted. Contracting of CT/PT construction. | City Engineer/ Junior Engineer | | | |
| **Operation and Maintenance (O&M) of CT/PT** | Contracting of CT/PT O&M. | Assistant Commissioner supported by Sanitary Officer, Junior Engineer | Monitoring and inspection of toilets and containment systems to retrofit insanitary toilets as per TNCDBR, 2019 standards | Sanitation Inspector/Officer | Sanitary Officer/ Sanitary Inspector |
| | Procurement of materials and assignment of staff for O&M | Assistant Commissioner supported by Sanitary Officer, Junior Engineer | | | |

Verified RediEstate™

| | | | | | |
|---|---|---|---|---|---|
| **Construction of Faecal Sludge Treatment Plant (FSTP)** | NA | NA | Review of designs and costs submitted | City Engineer, Executive Engineer | Executive Engineer, Municipal Engineer, Assistant Executive Engineer, Assistant, Engineer, Junior Engineer |
| | | | Oversee and approve contracting of FSTP construction | Commissioner/ Council | Commissioner, Executive Officer, Council |
| **Operation and Maintenance (O&M) of FSTP** | NA | NA | Contracting of FSTP O&M | Commissioner supported by City Engineer | Commissioner / Executive Officer supported by Municipal Engineer, Assistant Engineer, Junior Engineer |
| | | | Monitoring of FSTP O&M, co-composting, and re-use | Executive Engineer, Assistant Executive Engineer, Sanitary Inspector, Sanitary Officer | Municipal Engineer, Assistant Engineer, Junior Engineer, Sanitary Inspector, Sanitary Officer |
| | | | Operationalization/ execution of MoU | City Health Officer, Sanitary Officer/ Inspector | Commissioner, Executive Officer, Sanitary Officer/ Inspector |
| **Licencing of Desludging Operators** | Review and approval of licencing applications along with necessary documents | Sanitation Inspector/Sanitation Officer | Licencing of de-sludging operators as per the Standard Licence Agreement and maintenance of records of registered operators | Commissioner, City Health Officer, Sanitation Inspector/Officer | Commissioner, Executive Officer, Sanitary Inspector/Officer |

Verified RediEstate

| | | | | | |
|---|---|---|---|---|---|
| **Monitoring of Desludging Operations** | Monitoring of hotspots to prevent unsafe disposal and spillage | Sanitation Inspector/Sanitation Officer | Regular monitoring of hotspots to prevent unsafe disposal and spillage and penalty for defaulters | Commissioner, City Health officer, Sanitary Inspector / Officer | Commissioner , Executive officer, Sanitary Inspector / Officer |

### 4.1.2 Engagement of Private Sector

To improve capacities for and aid scaling of FSSM service delivery, potential roles for the private sector are highlighted in the Table 4.2 below:

**Table 4. 2: Engagement of Private Sector**

| Sanitation Processes | Private Sector |
|---|---|
| **Awareness creation for FSM** | Actively engage with public stakeholders to generate awareness on FSM technology and innovations. |
| **Upkeep of sanitation facilities** | Labor contracts for construction of CT/PT, O&M of CT/PT by contractors, Quality assurance and O&M of treatment facilities. |
| **Reuse** | Reuse activities and market opportunities for treated products |
| **Training of FSM stakeholders** | Provide trainings for third party applications that help to efficiently monitor treatment or desludging operations |

Verified RealEstate ™

# 5 PENAL PROVISIONS

The National Green Tribunal vide order dated 30.04.2019 (Original Application No. 1069 / 2018) has directed the GoTN the right to levy penalties on violations of these guidelines as environmental compensation fee.

The designated authority shall take cognizance of any violation of these guidelines or as prescribed by the ULBs in their bye-laws adopted for septage management and take the following actions

i. In case the owner of the building, desludging operator or person contravenes any of the provisions of this guideline or any rule or order made thereunder or obstructs lawful exercise of any power conferred by or under this guideline, the competent authority shall issue show cause notice and shall have the right to levy penalties as mentioned in Table 6.1 or such other amount as may be notified from time to time. In case of continuous violation of these guidelines the Authority shall have the right to increase penalties for every continuing breach as mentioned in Table 6.1.

ii. In case for any person who is found to be guilty, the penalty is not expressly provided in Table 6.1, they shall be punishable with a fine of twenty-five thousand rupees and in case of continuing contravention with an additional fine amounting to fifty thousand rupees for every day during which such contravention continues.

**Table 5. 1: Penal Provisions**

| No. | Violations | Fine (in rupees) | Authority |
|---|---|---|---|
| 1 | Failure to comply with any provisions under which the licence has been granted. | . Up to 25,000 for first offence and up to 50,000 for the second offence | ULB/ GCC/ Concerned Boards |
| 2 | Disposal of faecal sludge and septage into drains, open lands, water bodies or any other location other than the designated facility | | |
| 3 | Continuing Breach | Seizing the vehicle for one week or period prescribed by the authority and payment of maximum penalty as prescribed by the authority. | Area Engineer-CMWSSB, Tahsildar (Revenue department)-Town Panchayat; Commissioner-Municipality; and Municipal Corporation- any officer not lower in rank than that of an Assistant Commissioner |

iii. Vehicles seized by the designated authority shall be produced before a Magistrate, the Magistrate may make such order as he thinks fit respecting the release of the vehicle to the rightful owner. The Magistrate may order the vehicle to be delivered to the owner of the vehicle on such conditions (if any) as the Magistrate thinks fit.

Verified RedEstate

# ANNEXURES

## ANNEXURE 1: THE SEPTAGE MANAGEMENT BYE-LAWS

**<Insert ULB Name>**

**The Septage Management Bye-laws**

In exercise of powers conferred by Section 306 sub-section 5 (e) and sub-section 6 of the Tamil Nadu District Municipalities Act, 1920 (Tamil Nadu Act V of 1920) read with the Tamil Nadu District Municipalities (Amendment) Act, 1930 (Tamil Nadu Act X of 1930) / relevant sub-section ….. of the [City Municipal Corporation Act, …..] the Council of Municipal Corporation/ Municipality/ Town Panchayat of <Insert ULB Name> hereby makes the following bye-laws to regulate the construction and maintenance of latrines and septic tanks associated to such latrines in the buildings situated within the jurisdictional limits of the <Insert ULB Name>, collection, transportation and disposal of septage generated there.

These bye-laws shall be read with, *inter alia,* the Tamil Nadu Combined Development, Regulation and Building Rules, 2019; and other relevant rules and orders notified by the Government from time to time.

**1. Short title, commencement and applicability. –**

(1) These bye-laws shall be called the Septage Management Bye-laws for the Municipal Corporation/ Municipality/ Town Panchayat of <Insert ULB Name>.

(2) These bye-laws shall come into force on the date of publication in the Gazette of the district of <Insert District Name>.or such other date as may be specifically notified.

(3) These bye-laws shall apply to all buildings consisting of bathrooms, wash areas/latrines and /or urinal situated in the jurisdictional limits of the Municipal Corporation/ Municipality/ Town Panchayat of <Insert ULB Name>, whether used for residential or commercial or institutional purposes.

**2. Definitions. –**

In these bye-laws unless the context otherwise requires the terms stated below shall have the meaning ascribed to them herein, –

(i) **"Appellate Body"** shall mean the body consisting and notified from time to time in relation to these bye-laws.
(ii) **"Authority"** shall mean and include the Municipality as may be notified from time to time for the purpose of implementation of these bye-laws.

(iii) **"Decantation Fee"** shall mean the amount payable by the Operator to the Host ULB upon each visit to the Disposal facility for the disposal of Faecal Sludge or Septage.

.

(iv) **"Faecal Sludge"** shall mean raw or partially digested, in a slurry or semi solid form, the collection, storage or treatment of combinations of excreta and black water, with or without grey water. It is the solid or settled contents of pit latrines and septic tanks.

(v) **"Host ULB"** shall mean the ULB that owns and is responsible for the operation and maintenance of the Treatment Facility.

(vi) **"Insanitary Latrine"** shall mean Latrines where night soil is removed by human, serviced by animals or/and night soil is disposed into open drain or pit into which the excreta is discharged or flushed out, before the excreta fully decomposes.

(vii) **"Licence Fee"** shall mean the amount payable by de-sludging operators annually to obtain a licence to operate within a ULB Cluster.

(viii) **"Occupier"** shall include a person who occupies or rents a building or part of it located within the ULB limits.

(ix) **"On-site sanitation" (OSS) system**-A system in which excreta and wastewater is collected, stored, and/or treated and disposed at or near the point of generation.

(x) **"Operations and Maintenance" (O&M)** means the operation and maintenance of the FSTP and includes all matters connected with or incidental to such operation and maintenance and provision of services and facilities.

(xi) **"Operator"** shall mean any person or firm or self-help group or society or private company granted the licence to collect, transport and dispose of Faecal and Septage.

(xii) **"Owner"** shall include a person who owns a building or part of it located within the ULB limits.

(xiii) **"Sanitary Latrine"** shall mean the type and design of latrine and urinal connected to a Septic Tank or other on-site sanitation systems or Underground Sewerage System, which ensures safe confinement and disposal of faeces (non-digested excreta), each of which shall be constructed as per the design specifications and guidelines issued by the ULB.;

(xiv) **"Septage"** means the liquid and solid material that is contained in a septic tank, cesspool, or such on-site sanitation system.

(xv) **"Septic Tank"** shall mean an underground tank that treats wastewater by a combination of solids settling and anaerobic digestion, constructed as per the design specifications and guidelines issued by the ULB.

(xvi) **"Specified Vehicles"** shall mean the vacuum trucks or such other vehicles equipped with motorized pumps and storage tank owned by the ULB or Operator, of such design

Verified RealEstate™

specification as may be approved from time to time by the ULB, for emptying and transporting Faecal Sludge and Septage from Septic Tanks.

(xvii) **"Treatment Facility"** shall mean a treatment plant of the design specifications and guidelines, capable of the treatment and disposal of Faecal Sludge and Septage, as notified by the Authority from time to time.

(xviii) **"Urban Local Body (ULB)"** shall mean the Municipal Corporation/ Municipality/ Town Panchayat of <Insert ULB Name>.

(xix) **"ULB Cluster"** shall mean <Insert ULB Name> Municipal Corporation/ Municipality/ Town Panchayat and other ULBs, as notified by State Government from time to time, which together use the Faecal Sludge Treatment Plant or Sewage Treatment Plant.

**3. Measures and Compliances by Owner or the Occupier. –**

The Owner or Occupier, as the case may be, of a building or part of it located in the ULB Limits shall from the date of commencement of these bye-laws be liable to perform the following obligations: –

(i) shall, within the time specified in the notice issued by the Authority as per these bye-laws, discontinue the usage of insanitary latrines in such building and also close all outlets to common drains or open plot/land or water bodies located nearby and construct, operate and maintain only Sanitary Latrines in the buildings owned or used by him;

(ii) ensure that the Septic Tanks are maintained in a proper manner so as to ensure that the Faecal Sludge and Septage does not overflow;

(iii) allow the officials of the Authority inspection at reasonable times with prior notice;

(iv) conduct regular de-sludging as per design and operations requirement of septic tank, cesspool or such on-site sanitation systems; or as specified by ULB;

(v) engage only licenced Operators for the collection and transportation of Faecal Sludge and Septage from their building.

**4. Administrative Measures and Enforcement of Bye-laws. –**

The Authority or Host ULB, as the case may be, shall, from the date of commencement of these bye-laws have the right to perform the following functions: –

(i) undertake the survey and inspection of buildings located within the ULB limits and issue certificate of compliance to buildings which are in compliance with these bye-laws;

(ii) issue notices to Owners or Occupiers of buildings which are non-compliant to these bye-laws;

Verified RealEstate™

(iii) maintain a database of Septic Tanks, cesspool or such on site treatment facility of buildings within the jurisdictional limits;

(iv) implement and supervise the compliance of the bye-laws;

(v) conduct information, education and communication campaign with respect to awareness of Faecal Sludge and Septage management;

(vi) notify Operators operating within the jurisdiction of the ULB Cluster or the Host ULB as applicable of the operational hours of the Treatment Facility, the disposal process, Decantation Fee and excluded delivery routes during specified hours;

(vii) direct and supervise the licencing of Operators and publish the names of such licenced Operators for the general public mentioning the details of public complaint/ grievance redressal mechanism to report violations by Operators;

(viii) direct, regulate and supervise the collection, transportation and disposal of Faecal Sludge and Septage at the Treatment Facility;

(ix) inspect and regulate the quality and maintenance of the Specified Vehicles;

(x) inspect the quality of Faecal Sludge and Septage being collected and transported to the Treatment Facility;

(xi) allow or ensure/direct disposal of Faecal Sludge and Septage from Operators operating within the jurisdiction of the ULB Cluster or the Host ULB as applicable at the Treatment Facility;

(xii) sign, within a reasonable time period from the date of commencement of these bye-laws, the *Memorandum of Understanding for* the *Treatment of the Faecal Sludge and Septage* as per G.O. (2D) 35, Municipal Administration and Water Supply Department, dated 15.05.2020, with the ULB Cluster or the Host ULB as applicable, for the disposal of Faecal Sludge or Septage at the Treatment Facility;

(xiii) make payment towards the O&M Fee of the Treatment Facility in proportion to the population of the ULB and in accordance with the formula in Annexure A to these bye-laws, as applicable;

(xiv) ensure Operators operating within the irrespective jurisdiction shall have a valid desludging licence;

(xv) undertake investigations and levy penalties on Owners or Occupiers or Operators found to be in violation of these bye-laws.

Verified RediEstate

**5. Appointment and Operation by Operators. –**

(i) The Authority or the Host ULB shall within a reasonable time period from the date of commencement of these bye-laws, shall publish notice inviting applications from operators interested to offer de-sludging services in <Insert ULB Name> Municipal Corporation/ Municipality/ Town Panchayat applicable for two years from the date of issue.

(ii) The Operators shall submit an application to the Host ULB and pay the Licence Fee of Rs.2000/- (Rupees Two Thousand Only) or as notified by the Host ULB from time to time.

(iii) Upon scrutiny of applications, the operators meeting the defined licencing criteria will be issued a licence valid for two years from the date of issue as per the format attached in Annexure B to these bye-laws.

(iv) The Operators operating without a valid licence shall be deemed to be in violation of these bye-laws.

(v) The Operators or ULB shall be responsible for maintaining and operating Specified Vehicles and associated equipment, if any, as per the guidelines issued by the Authority or the Host ULB from time to time.

(vi) The Operators or ULB-owned Specified Vehicles shall be responsible for the collection and transportation of Faecal Sludge and Septage from buildings as per the performance standards to be determined and the instructions issued by the Authority or the Host ULB from time to time.

(vii) The Operators shall comply with the provisions governing the licence.

(viii) The Operators or ULB-owned Specified Vehicles shall not transport industrial or mixed industrial waste of any nature whatsoever.

(ix) The Operators shall comply with all the local legislations and maintain all permits and approvals required for the performance of its activities permitted under the licence.

(x) The Operators or ULB shall employ only trained personnel and provide all necessary protective gear to such personnel while performing the collection and transportation of Faecal Sludge and Septage.

(xi) The Operators or ULB shall employ adequate number of personnel so as to ensure that the collection and transportation of Faecal Sludge and Septage is performed as per the performance standards notified by the Authority or the Host ULB from time to time.

(xii) The Operators or ULB shall at all times ensure compliance with the Prohibition of Employment as Manual Scavengers and their Rehabilitation Act, 2013 (Central Act 25 of 2013), and rules there under.

Verified RegEstate ™

(xiii) The Operators or ULB shall perform all such protective activities as instructed by the Authority during the occurrence of an accident.

(xiv) The Operators or ULB shall be responsible for the safe disposal of the Faecal Sludge and Septage at Treatment Facility notified by the Authority.

(xv) The Operators shall pay the Decantation Fee of Rs.100/- or as notified from time to time by the Host ULB, for disposal of the Faecal Sludge and Septage at the Treatment Facility.

**6. Penalties for Violation of Bye-laws. –**

The Authority shall take cognizance of any violation of these bye-laws and take the following actions: –

(i) In case of the Owner or Occupier, the Authority shall issue show cause notice and have the right to levy penalties of up to Rs. 25,000/- for each violation or such other amount as may be notified from time to time. In case the Owner is in continuous violation of these bye-laws the Authority shall have the right to levy penalties not exceeding Rs. 50,000/-.

(ii) Against the Operator, the Authority shall issue show cause notice and have the right to levy penalties of up to Rs. 25,000/- for each violation or such other amount as may be notified from time to time. Where the Operator is in continuous violation of these bye-laws the Authority shall have the right to levy penalties not exceeding Rs. 50,000/- .

(iii) Where the Operator is in violation of para 5 sub-paras (v), (vii) to (xiii) or continuous violation of these bye-laws, the Authority or the Host ULB shall have issue show cause notice and have the right to revoke the licence issued to the Operator.

**7. Appeals. –**

(i) The ULB shall within a reasonable time period from the date of commencement of these bye- laws constitute an Appellate Body and issue necessary notifications.

(ii) The Owner, Occupier or the Operators shall have the right to appeal to the Appellate Body against a show-cause notice issued by the Authority, within 30 days of the receipt of such show cause notice.

(iii) The Appellate Body shall commence hearing on an appeal within 15 days from the date of filing.

(iv) The Authority, Owner/Occupier and the Operators shall be liable to comply with the decisions made by such Appellate Body.

Verified RedEstate™

**8. Power to remove difficulties. –**

If any difficulty arises in giving effect to these bye-laws, the Council of Municipal Corporation/ Municipality/ Town Panchayat of <Insert ULB Name> may by order, to be published in the gazette of the district of <Insert District Name>, amend these bye-laws to remove the difficulties.

**9. Saving. –**

In case any of these bye-laws are inconsistent with any of the provisions of the Tamil Nadu District Municipalities Act, 1920 (Tamil Nadu Act V of 1920) or City Municipal Corporation Acts[6] or Tamil Nadu Combined Development Regulation and Building Rules, 2019, such provisions of the Tamil Nadu District Municipalities Act, 1920 (Tamil Nadu Act V of 1920) or City Municipal Corporation Acts or Tamil Nadu Combined Development Regulation and Building Rules, 2019 or their subsequent amendments shall prevail over these bye-laws, while all other bye-laws shall remain effective.

**Annexure A to**
**The Faecal Sludge and Septage Management Bye-Laws**

**Faecal Sludge Treatment Plant O&M Fee – Formula**

$$\frac{\textbf{Population of Host ULB or ULB}}{\textbf{Population of ULB Cluster}} \times \textbf{O\&M Cost of Treatment Facility per Year}$$

[6]Avadi City Municipal Corporation Act, 2019;Chennai City Municipal Corporation Act, 1919; Coimbatore City Municipal Corporation Act, 1981; Cuddalore City Municipal Corporation Act, 2022; Dindigul City Municipal Corporation Act, 2013; Erode City Municipal Corporation Act, 2008; Hosur City Municipal Corporation Act, 2019; Kancheepuram City Municipal Corporation Act, 2022; Karur City Municipal Corporation Act, 2022; Kumbakonam City Municipal Corporation Act, 2022; Madurai City Municipal Corporation Act, 1971; Nagercoil City Municipal Corporation Act, 2019; Salem City Municipal Corporation Act, 1994; Sivakasi City Municipal Corporation Act, 2022; Tambaram City Municipal Corporation Act, 2022; Thanjavur City Municipal Corporation Act, 2013; Thoothukudi City Municipal Corporation Act, 2008; Tiruchirappalli City Municipal Corporation Act, 1994; Tirunelveli City Municipal Corporation Act, 1994; Tiruppur City Municipal Corporation Act, 2008; and Vellore City Municipal Corporation Act, 2008

## ANNEXURE 2: TECHNICAL OPTIONS FOR TOILETS UNDER SBM (URBAN)

This note explains the technical options for toilets that are recommended under the Swachh Bharat Mission (SBM) Urban. Wherever a sewerage system is available within 30m from the proposed individual household, community, or public toilets only the superstructure (i.e., toilets) may be constructed under SBM and connected to the existing sewerage system. No construction of treatment units such as twin pits, septic tank, bio-digester, or bio- tank shall be allowed.

### Features of OSS Systems

When sewage is collected, treated and/or disposed off at, or near the point of generation, without the use of an underground sewerage system, the system is called "on-site sanitation" (OSS) system. OSS systems are sanitation facilities provided for the use of individual households, community and the floating population. There are a number of situations when an underground sewerage system may not be feasible or desirable. For example, for smaller cities where construction of sewerage infrastructure may be expensive, or those cities that are in hilly areas or in undulating terrain where it may not be practical to construct a sewer network, or even in many cities that have grown organically and where not all households are connected to the existing sewerage network.

OSS systems consist of two main structures, the toilet (superstructure, including the pan and water closet) and the treatment unit. OSS retains waste in the vicinity of the toilet either in a pit, tank or vault. The treatment ranges from a basic sanitary facility such as twin-pit latrines, to a simple type of treatment system by combining a septic tank and a soak pit, or a bio-digester toilet (aerobic and anaerobic).

The following technological options for OSS are recommended under Swachh Bharat Mission (SBM) Urban for construction of Individual Household Latrines (IHHL) / household toilets, group / shared latrines, and community and public toilets.

**Table A 2.1 Features of OSS**

| S. No. | OSS option | Kind of latrines | | | | Application |
|---|---|---|---|---|---|---|
| | | IHHL | Shared latrines | Community toilets | Public toilets | |
| 1 | Twin-pit latrines / Leach Pits | √ | | | | In low to medium density areas, particularly peri-urban areas, where there is space to install pits and where the digested sludge can be applied to local fields and/or gardens as a fertilizer and soil conditioner. Where water use is in the range 30–50 liters per capita per day depending upon the characteristics of the soil or groundwater level. |

| | | | | | | |
|---|---|---|---|---|---|---|
| 2 | Septic Tank System with soak Pit | √ | √ | √ | √ | Septic tanks are widely used to provide partial treatment of wastewater from individual homes, household clusters or institutional buildings where there is no sewerage network. For soak pits to function, soil conditions must be suitable for infiltration of effluent from septic tanks |
| 3 | Biodigester toilets (Anaerobic – developed by DRDO) | √ | √ | √ | √ | Widely used to provide 80% treatment of wastewater from IHHL, household clusters or institutional buildings where there is no sewerage network.<br>The effluent should be passed through a reed bed or soak pit before discharge.<br>For soak pits to function soil conditions must be suitable for infiltration of effluent from septic tanks |
| 4 | Aerobic Bio Tank | √ | √ | √ | √ | Widely used to provide 100% treatment of wastewater from IHHL, clusters of houses or institutional building where there is no sewerage network. The effluent can be directly discharged since it is completely safe. Chlorination is followed treatment |

**<u>Technical features and specification for toilets under SBM (Urban)</u>**

The details of technical features and specifications for toilets are given as under. The costs are simply estimates at this point of time and should be verified at the time of selection and installation of the technology.

I. Twin-Pit Latrine

| | |
|---|---|
| Description | It consists of superstructure (Toilet) and treatment units (two chambers). The two underground chambers (pits) are provided to hold faecal sludge. These are normally offset from the toilet and should be at least 1 meter apart. A single pipe leads from the toilet to a small diversion chamber, from which separate pipes lead to the two underground chambers. The pits should be lined with open-jointed brickwork. Each pit should be designed to hold at least 12 months accumulation of faecal sludge.<br><br>Wastewater is discharged to one chamber until it is full of faecal sludge. Discharge is then switched to the second chamber. Just before the second chamber is full of faecal sludge, the contents of the first pit are dug out. During the time of storage, digestion should ensure that it is odorless and free of pathogens. |

Verified RedEstate™

| | |
|---|---|
| O & M Requirements | The pits must be used alternately, and the diversion chamber must be accessible so that flow can be diverted between chambers. Wastewater should never be diverted back to the first chamber before digested sludge has been removed from it.<br><br>Responsibility for O&M of the twin-pit latrine rests primarily with the householder, who needs to ensure that the pits are used in the correct sequence and are emptied at the appropriate time. However, ULB utility or private contractors are required for emptying and to ensure safe disposal of septage at a treatment plant. |
| Additional Infrastructure / treatment requirements | If digested material cannot be used in local fields and gardens, provision will have to be made for transportation to areas outside the city for reuse on agricultural land. |
| Limitations | Households may not understand the system and as a result may not use the pits alternately or may omit to rest the filled pit at least for one year so that the contents degrade and become harmless. Explanation of the operation and maintenance requirement is therefore essential at the time of installation.<br>Water may percolate through the soil surrounding the pit and pollute groundwater, which is a potential problem if water is used for drinking. |
| | a) Size options for Toilet/ Super Structure (as shown in Fig.1):<br>750 mm x 900 mm x 1900 mm;<br>or<br>800 mm x 1000 mm x 1900 mm<br>b) Material – Brick work (as per Fig. 1) / FRP/ Pre-cast Cylindrical Unit<br>c) Minimum Land Requirement – 40 Sq. ft. - 60 Sq. ft.<br>(depending upon the location of superstructure and distance between two pits) d) Size of Pits is shown in Table -1 below: |

| | 5 users[2] | | 10 users[3] | | 15 users[4] | |
|---|---|---|---|---|---|---|
| | **Dia** | **Depth (A)** | **Dia** | **Depth (A)** | **Dia** | **Depth (A)** |
| Pit size | 900 | 1000 | 1100 | 1300 | 1300 | 1400 |

[2]*Only for IHHL*
[3]*Group household toilets*
[4]*The specification for pits given at Fig 2 may be referred to.*

| | |
|---|---|
| Cost (for 5 users) | Tentative cost varies from Rs. 15,000/- to Rs. 20,000/- depending upon the construction material |

## II. Septic Tank with Soak Pit

| | |
|---|---|
| Description | A septic tank is a buried chamber that collects, stores and treats the wastewater under anaerobic conditions. Effluent from septic tanks should be discharged into a soak pit. A well-managed septic tank will remove about 50 to 60 % of the biological load in the wastewater |
| Mode of operation | Solids settle in the tank and digest anaerobically. This reduces sludge volume and enables wastewater to infiltrate into the ground without clogging the leaching system. Sludge settles in the tank and digests anaerobically over time, releasing methane and other gases |
| O&M Requirements | Septage must be removed from septic tanks at least once every 2 or 3 years and transported off-site for treatment prior to disposal. Municipal utility or private contractors are required for desludging of septic tanks and to ensure safe disposal of septage at a treatment plant. However<br>the responsibility for O&M of the septic tank itself lies with the owner of the property |

Verified RealEstate™

| | |
|---|---|
| Limitations | **Septic tank:**<br>Cost and space requirements for the soak pit. Though septic tanks are designed for receiving black water, they often receive both black and grey water. As a result, the retention time in the septic tank is insufficient and the soak pit becomes hydraulically overloaded. This means that the septic tanks need to be de-sludged regularly |

Specifications

(a) Size options for toilet / super structure as shown in Fig. 1. 750 mm x 900 mm x 1900mm or 800 mm x 1000 mm x 1900 mm

(b) Material – Brick work (as per Fig. 1) / FRP / Pre-cast Cylindrical Unit

(c) Minimum Land requirement -40 Sq. ft. to 50 Sq. ft. (depending upon the location of superstructure)

(d) Soak-pit size -The seepage pit may be of any suitable shape with the least cross-sectional dimension of 0.90 m and not less than 1 m in depth below the invert level of the inlet pipe. The construction shall be of perforated brickwork. Type and size of the soak pit can be arrived from IS 2470 part 2.

(e) Recommended sizes of septic tanks for households (up to 20 users – group / shared toilets) is given in table below:

| **No. of users** | **Length (m)** | **Breadth (m)** | **Liquid depth (m) (Cleaning interval of)** | |
|---|---|---|---|---|
| | | | **2 years** | **3 years** |
| 5 * | 1.5 | 0.75 | 1.0 | 1.05 |
| 10 ** | 2.0 | 0.90 | 1.0 | 1.4 |
| 15 ** | 2.0 | 0.90 | 1.3 | 2.00 |
| 20 ** | 2.3 | 1.10 | 1.3 | 1.8 |

** Only for IHL*

*** Group household toilets*

Note 1: The capacities are recommended on the assumption that discharges from only WC will be treated in the septic tank Note 2: A provision of 300 mm should be made for free broad. Note 3: The sizes of septic tank are based on certain assumption on peak discharges, as estimated in IS: 2470 (part 1) and while choosing the size of septic tank exact calculations shall be made.

Cost (for 5 users)

- Tentative cost varies from Rs.25,000/- to Rs.30,000/- depending upon the construction material (toilet and septic tank).
- Prefabricated septic tanks are available at lower cost in the market, which also may be explored to speed up the implementation.
- Disposal arrangement cost not included.

## III. Bio-digester toilet (developed by DRDO)

| | |
|---|---|
| Description | A bio-digester toilet is an anaerobic multi-compartment tank with inoculum (anaerobic bacteria) which digests organic material biologically. The details of biodigester toilets are shown in **Figure 7**. This system converts faecal waste into usable water and gases in an eco-friendly manner. It can be connected to the toilet or a series of toilets. The toilet can be a superstructure fixed on the biodigester or a separate unit. Bio-digester has an inlet, an outlet, and a gas pipe.<br><br>The tank has two components, namely, anaerobic microbial inoculum (seed bacteria) and specially designed fermentation tank. The tank can be made out of Stainless steel, Mild steel, |

| | |
|---|---|
| | FRP or concrete. Semi-treated water from bio-digester tank is needed to be further disposed into a soak pit or a reed bed arrangement for its treatment to acceptable levels of discharge. |
| Advantages | • As there is no sludge formation, there is no need for de-sludging and treatment. It is therefore more economical in the long-term as it conserves water and has minimum O&M<br>• Night soil degradation occurs through microbial reaction which converts it into biogas and odorless water.<br>• Technology is environmentally friendly, maintenance free and efficient without depending on conventional energy sources.<br>• Permits use of toilet cleansing agents.<br>• Suitable for mobile and stationary platforms.<br>• Lifelong usage bio-digester tank does not need recharging, re-shifting, or maintenance.<br>• Costs lesser than the conventional toilets.<br>• Easy to transport and install.<br>• One-third to one-fourth capacity of septic tank<br>• Space requirement is less. |
| Specifications | **Toilet Superstructure**<br>(a) Size of Toilet / super structure – as shown in Fig. 1<br>• 750 mm x 900 mm x 1900 mm or<br>• 800 mm x 1000 mm x 1900 mm<br>(b) Material – Brick work (as per Fig. 1) / FRP/ Precast Cylindrical Unit<br><br>**Bio tank**<br>(a) Land requirement – 25 sq. ft.<br>(b) Tank internal dimensions – 1336 mm x1036 mm x 900 mm<br>(c) Diagonal partition wall of 8mm thickness (adequately stiffened by ribs)<br>(d) Tank is buried 600mm deep and anchored by 300mm long stainless steel (SS316) anchor bolts at corners<br>(e) FRP tanks of 8mm thickness<br>(f) Provision of water sealed outlet from the tank(g) For 5-6 users:<br>• Total capacity: 700 litres(1000mmX700mmand1000mmdepth).<br>• Where space is a constraint the depth of the tank can be increased to 1.5 m<br>• Volume of an aerobic Compartment (30% of total capacity): 210 litres<br>• Tank may be constructed with masonry also.<br>**Soak Pit**<br>(a) Type and size of the soak pit can be arrived from IS 2470 part 2. |

**Table 3 - Volume of bio-digester tank for various user groups**:

| Bio-digester tank | | Material of construction | |
|---|---|---|---|
| **No. of users / capacity** | **Masonry** | **Precast cylindrical unit** | **Fiber reinforced plastic** |
| 5 to 7 users (700 Litre) | 17,100 | 11,600 | 22,000 |
| 10 to 12 users (1000 Litre)* | 19,000 | 13,600 | 24,000 |

* Group / Shared toilets

Verified by RediEstate ™

## IV. IV Bio Tank / Bio Toilets (Patented by private operators and approved by the Department of Science and Technology)

| | |
|---|---|
| Description | This technology differs from that of the bio-digester toilets developed by DRDO since the process adopted is aerobic - which involves a different multi-strain of bacteria which breaks down the waste matter through oxidization. Bio-toilets consist of a purpose built multi-chambered bio-tank in which the waste is stored as shown in **Figure 8**. The movement of the waste is slowed down as the waste flows from one chamber to another by a special process in the Bio-tank such that the multi-strain bio-media present in the tank can digest the waste and convert it fully into non-toxic neutral water. This water then passes through the last chamber for disinfection. Here water is treated with Chlorine where the majority of the germs are killed. The resultant water is free from all sorts of E-coli and faecal coliforms.<br><br>The bricks and mortar Bio-tank is described in the last diagram of Figure 8. The superstructure is made of bricks and mortar. These are available in both flush and non-flush models. |
| Advantages | Aerobic bacteria are very efficient in breaking down organic waste and the waste is decomposed into water by the bacteria within 24 hours. The end products of aerobic degradation are carbon dioxide ($CO_2$) and water ($H_2O$).<br>The aerobic pathway also releases a substantial amount of energy.<br>The Bio-toilet is available in both portable as well as fixed models. The advantage of the portable model is that it can be shifted from one location to another as and when required, and the module can be assembled and disassembled easily.<br>The Bio-toilet eliminates the need for any periodic sludge removal. |
| Limitations | The bacteria functions best in temperatures between 4 and 55 degrees centigrade<br>Bio-toilets need proper bacteria inoculation periodically depending on the usage at particular sites. An in-depth understanding of the operation and use of toilets in a given area must be undertaken BEFORE choosing bio-toilets as a solution. Attention must be given to O&M, especially in dense urban settlements where chances of blockage of bio-toilets increase, making it dysfunctional over a period of time if the inoculation is not done in time.<br>Phenyl/ Harpic or any strong detergent/acid and bleaching powder should not be used to clean the pan. Only herbal / ayurvedic cleaning agents should be used.<br>Chlorine dose is necessary for disinfection. |
| O&M | Responsibility of cleaning the toilet / superstructure is with the owner of the household in the case of IHLs / shared latrines and with the ULB in the case of community / public toilets. |
| Specifications | a) Size of Toilet/ Super Structure as shown in Fig. 1<br>• 750 mm x 900 mm x 1900 mm or<br>• 800 mm x 1000 mm x 1900 mm<br>b) Material – Bricks and Mortar walls of Bio Digester tank and Superstructure, PCC tank floor, RCC toilet floor, PVC Door and Frame, RCC/PVC/GI sheet Toilet Roof.<br>c) The Bio-toilet system consists of:<br>• Biodigester Tank(Bricks & Mortar/FRP/Steel),<br>• Superstructure (Bricks & Mortar/FRP)<br>• IndianPan/WC<br>• Size: 4 feet x 4 feet tank base, 4 feet tank height, 6 feet superstructure height.<br>• Maximum usage recommended: 30 defecations/ day/ bio-toilet (no limit on urination) |

Verified RealEstate™

| | |
|---|---|
| | d) Land requirement - 16 Sq. ft. |
| Cost estimates | The tentative cost of bio-toilet including super structure is approximately Rs.20,000/– depending upon material of construction. The bio-toilets should be supplied by the manufacturers, and the O&M for at least 5 years including the feeding of inoculum in the periodicity needed) along with IEC (to train users for O&M) by the manufacturer / supplier also should be built into the undertaking. |

## V. Norms & Specifications for Community and Public Toilets

| | |
|---|---|
| Description | A community toilet block is a shared facility provided for a group of residents or an entire settlement. Community toilet blocks are used primarily in low-income informal settlements where space and/or land are constraints. Pour flush option is generally used in this kind of OSS systems. It is also advisable to provide facilities like washing, bathing, and a small incinerator in this block for the use of the community. Public toilets are provided for the floating population / general public in places such as markets, train stations or other public areas, where there is a considerable number of people passing by. |
| Septic tanks for public / community toilets | Recommended sizes of septic tanks for community/ public toilets (up to 300 users) are given below in Table 5. |

| No. of users | Length (m) | Breadth (m) | Liquid depth (cleaning interval of) | |
|---|---|---|---|---|
| | | | 2 years | 3 years |
| 50 | 5.0 | 2.00 | 1.0 | 1.24 |
| 100 | 7.5 | 2.65 | 1.0 | 1.24 |
| 150 | 10 | 3.00 | 1.0 | 1.24 |
| 200 | 12.0 | 3.30 | 1.0 | 1.24 |
| 300 | 15.0 | 4.00 | 1.0 | 1.24 |

(Source: Manual on Sewerage and Sewage Treatment Systems, 2013 Part A Engineering)

Note 1: A provision of 300 mm should be made for free board.
Note 2: The sizes of septic tanks are based on certain assumptions on peak discharges, as estimated in IS: 2470 (Part 1) and while choosing the size of septic tank exact calculations shall be made.
Note 3: For population over 100, the tank may be divided into independent parallel chambers of maintenance and cleaning

| | |
|---|---|
| Disposal arrangement for public / community toilets | Type and size of the disposal arrangement can be arrived from IS 2470 part 2. |
| Community Toilet - Norms for toilet seats | Oneseatfor35 men.<br>Oneseatfor25women<br>Adequate bathing facilities |

Verified RedEstate ™

| | |
|---|---|
| Public Toilets - Norms for toilet seats | Norms for toilet sets for public toilets are given in Table 6 below:<br>(Source: Manual on Sewerage and Sewage Treatment Systems, 2013 Part A Engineering)<br>Note:<br><br>i) It may be assumed that two-thirds of the number are males and one-third females ii) One water tap with drainage arrangements shall be provided for every 50 persons or part thereof in the vicinity of water closet and urinals.<br><br>* At least 50% of female WCs may be Indian pan and 50% EWC iii) Separate seat may also be provided for trans-genders iv) Special arrangements may be made for physically challenged. |

| S. No | Sanitary unit | For males | For females (A) |
|---|---|---|---|
| 1 | Water closet (W.C) | One per 100 persons up to 400 persons; For over 400 persons, add at the rate of one per 250 persons or part thereof | Two for 100 persons up to 200 persons; over 200 persons, add at the rate of one per 100 persons or part thereof |
| 2 | Ablution taps | One in each W.C | One in each W.C |
| 3 | Urinals | One for 50 persons or part thereof | Nil |
| 4 | Wash Basin | One per W. C. and urinal provided | One per W. C. provided |

| | |
|---|---|
| Treatment units | Bio Digester with reed bed systems/ soak pits<br>Bio Tank<br>Septic Tank with Soak Pits |
| Cost | Tentative basic cost for community toilets are Rs. 65,000/- per seat and public toilets is Rs. 75,000/- per seat. However, the cost per seat would vary depending upon the construction material, quality of construction, type of treatment technology adopted and O&M for specified period etc. However, the costs of toilet in bio-digester given by NBCC are as under. |

| **Superstructure 5 Cubicle for 200 users** | | |
|---|---|---|
| Pre-Painted galvanized Sheets | Masonry | Cement Board |
| Rs 1,63,000 /- | Rs 95,000 /- | Rs 80,000 /- |
| **Superstructure 10 Cubicle for 400 users** | | |
| Pre-Painted galvanized Sheets | Masonry | Cement Board |
| Rs 3,26,000 /- | Rs 1,80,000 /- | Rs 1,60,000 /- |
| **Bio Digester Tank 10 KLD for every 200 users** | | |
| Masonry | | |
| Rs 1,74,000 /- per 20 users | | |

| | |
|---|---|
| Additional Infrastructure | It must be ensured that adequate water supply arrangement shall be made for proper functioning and upkeep of toilets. Wherever possible, ULBs should ensure that public and community toilets are outfitted with solar panels for the generation of electricity to ensure uninterrupted power supply and bring down O&M costs. |
| Implementation mode | All toilets shall be constructed through PPP mode with inbuilt provision of O&M for at least a period of 5 years |

For additional details the guidelines developed by NBCC can be downloaded. **(www.nbccindia.gov.in)**

Verified RedEstate™

**Figures**

Figure 1: Detailed layout of toilet

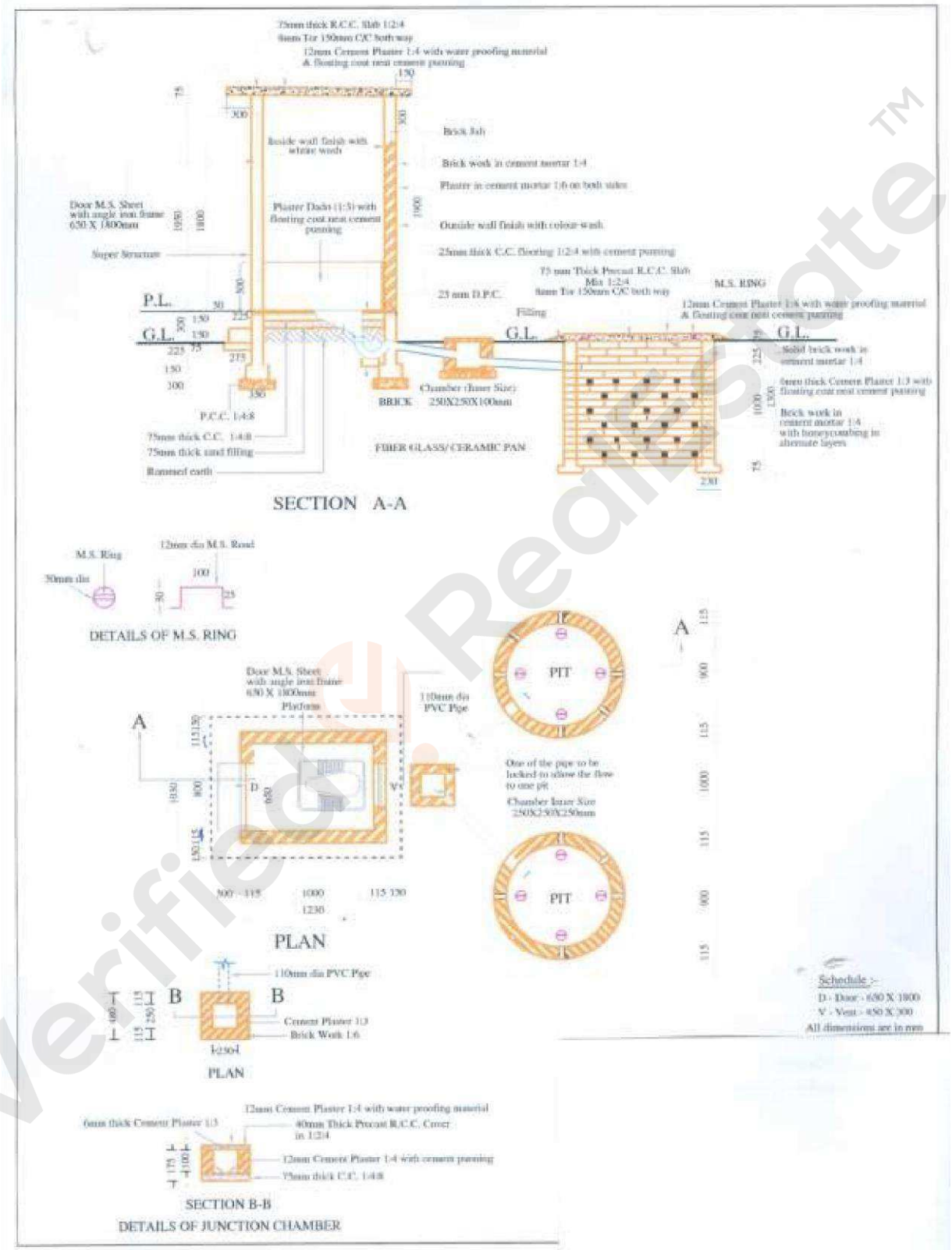

Figure 2: Pour-flush latrine with circular pits

*(Source: Manual on Sewerage and Sewage Treatment Systems, 2013, Part A: Engineering)*

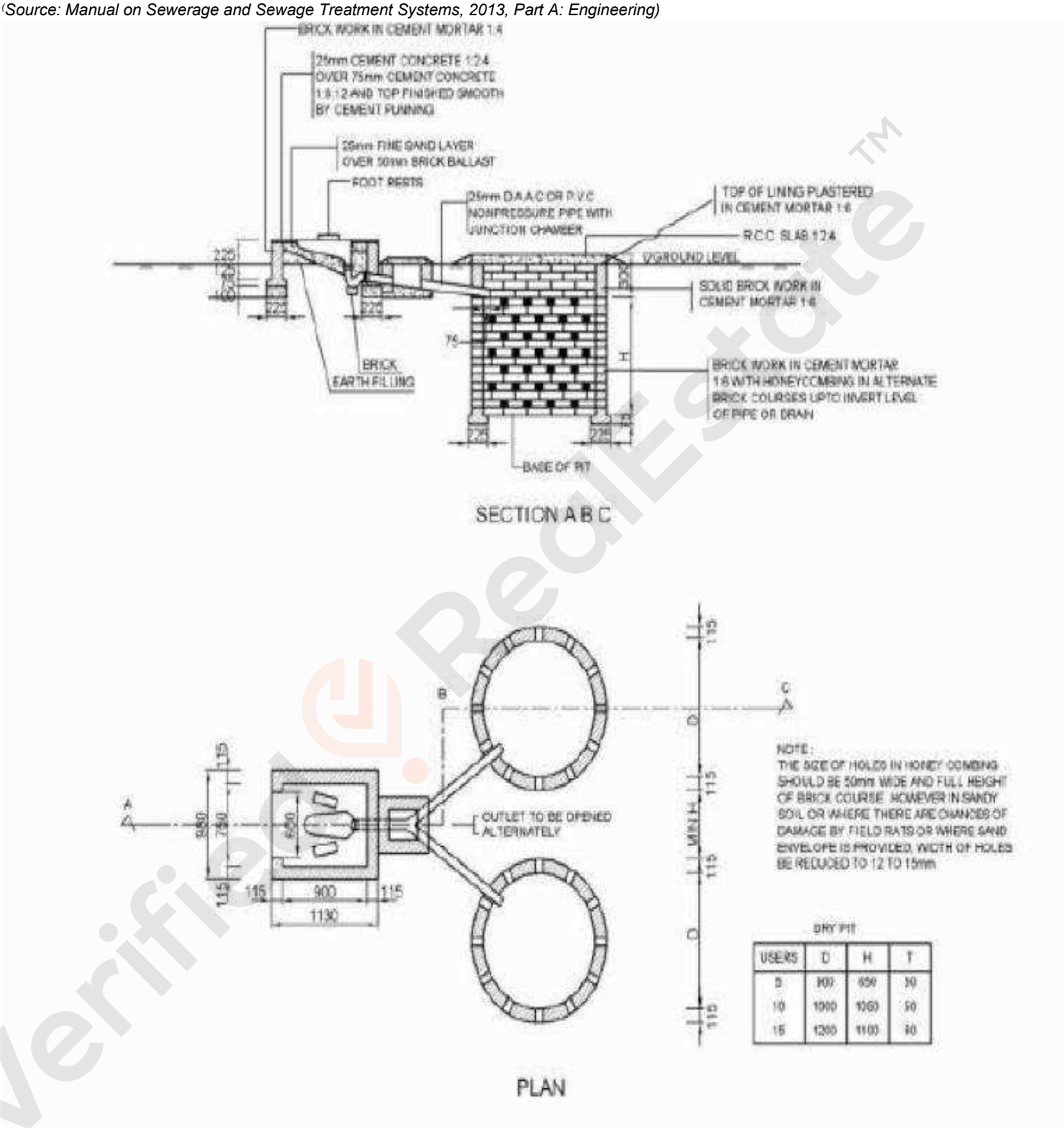


Verified RedEstate ™

Figure 3: Pour-flush latrine in water-logged areas

*(Source: Manual on Sewerage and Sewage Treatment Systems, 2013, Part A: Engineering)*

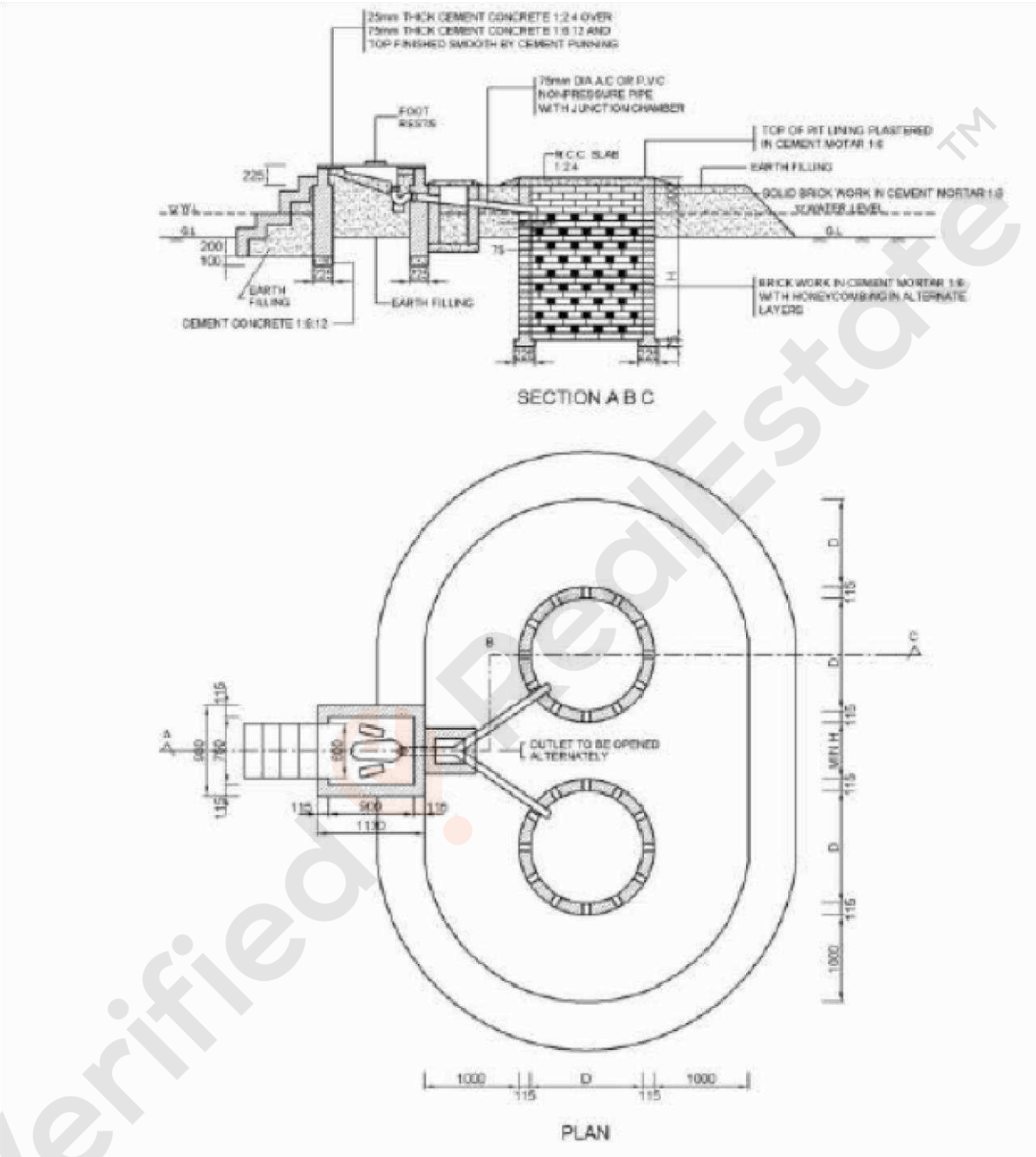

Figure 4: Leach pits in high subsoil water level

*(Source: Manual on Sewerage and Sewage Treatment Systems, 2013, Part A: Engineering)*

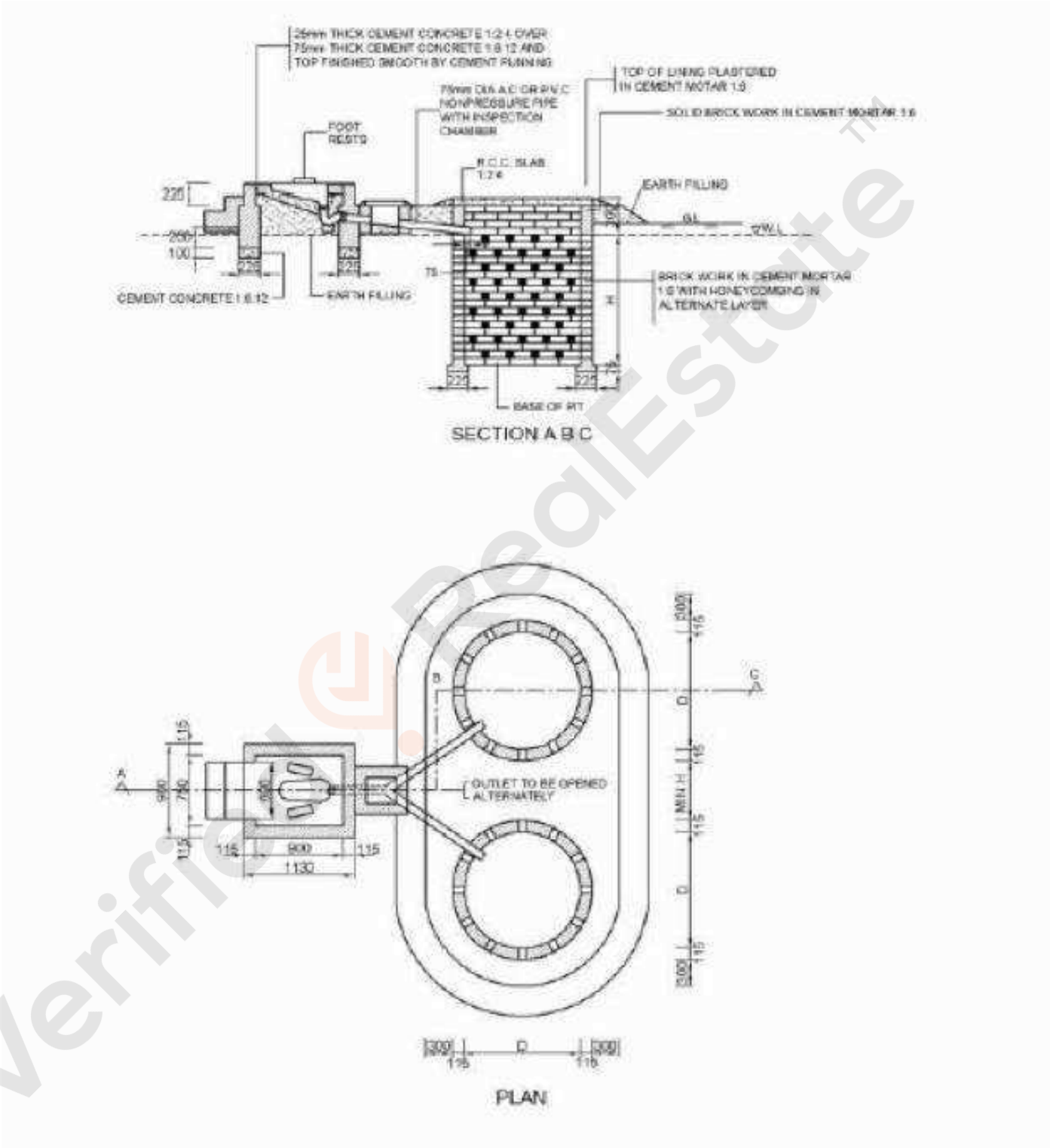


Verified © RedEstate ™

Figure 5: Pour-flush latrine with combined pits

*(Source: Manual on Sewerage and Sewage Treatment Systems, 2013, Part A: Engineering)*

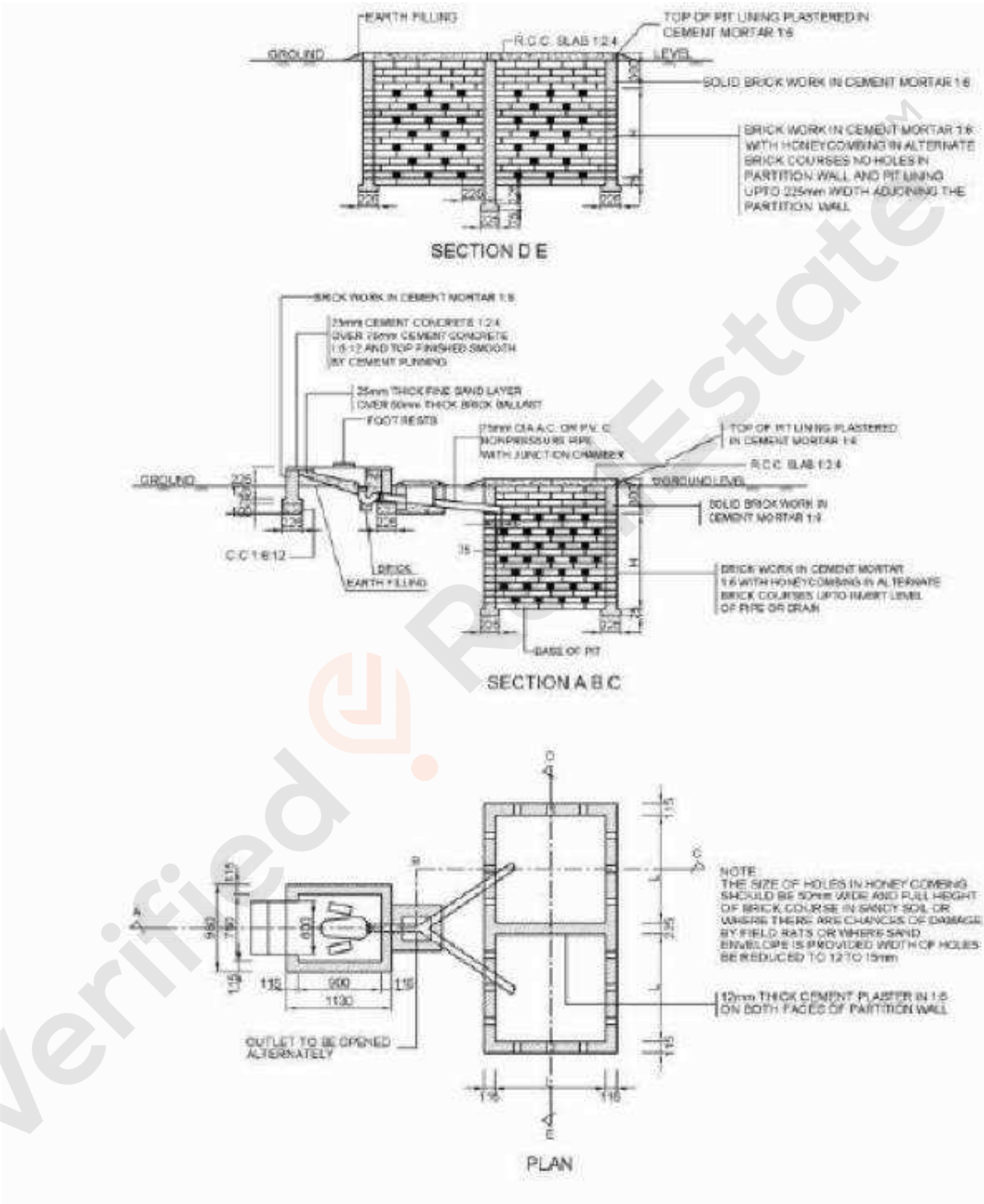

Figure 6: Typical sketch of two-compartment septic tank for 5 users
*(Source: Manual on Sewerage and Sewage Treatment Systems, 2013, Part A: Engineering)*

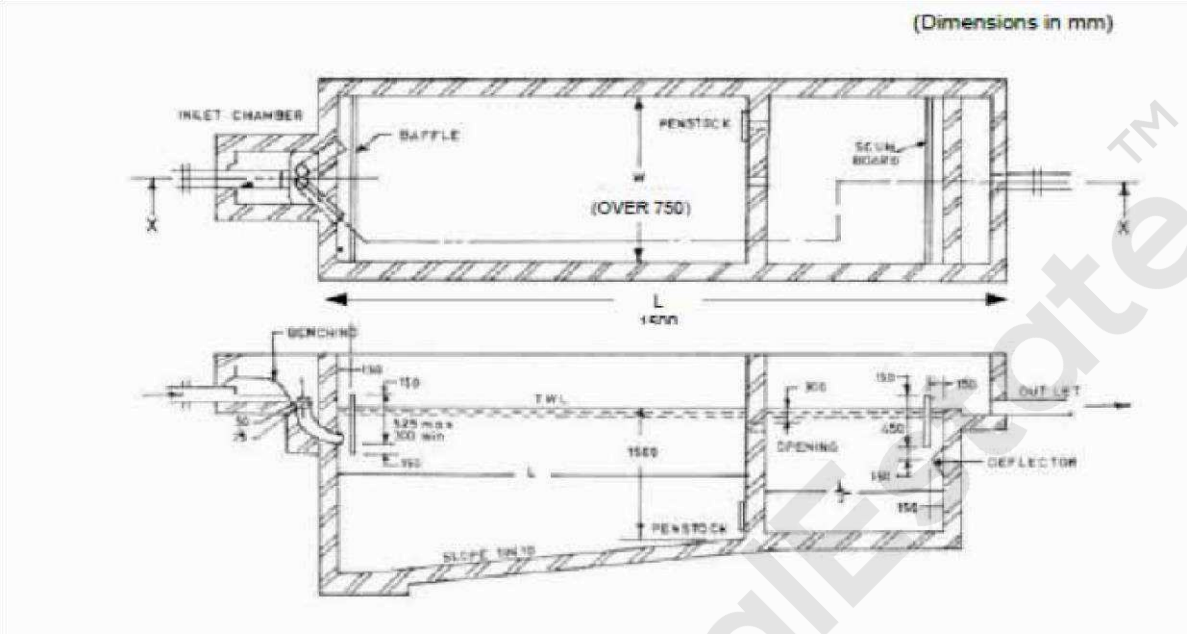


Figure 7: Details of bio-digester with reed bed *(Source: DRDO)*

Verified RedEstate™

Figure 8: Details of Bio-Toilet

*(Source: Private Agency)*

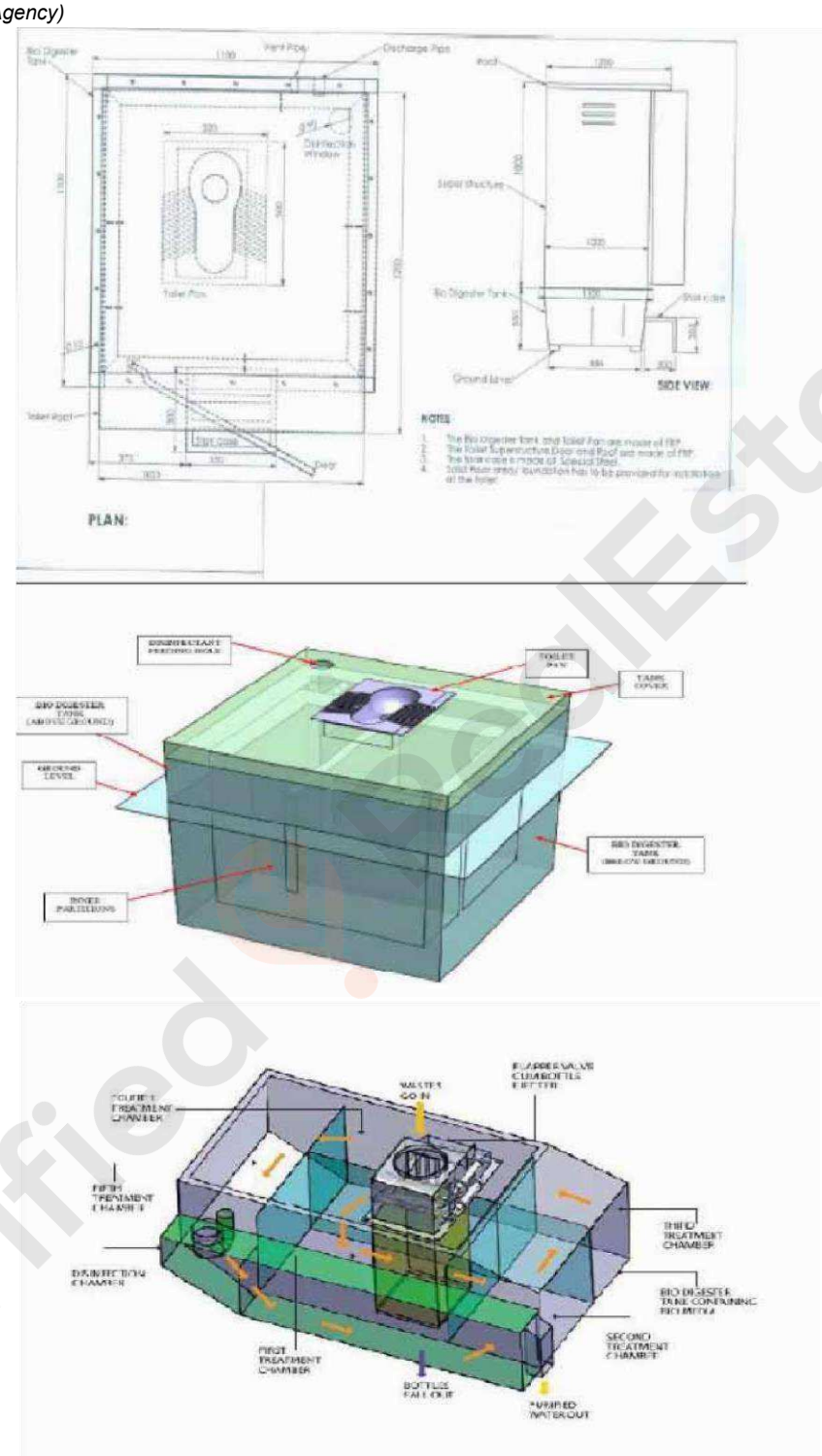


Verified RealEstate™

## ANNEXURE 3: DE-SLUDGING PROCESS

Figure 1: De-sludging Process

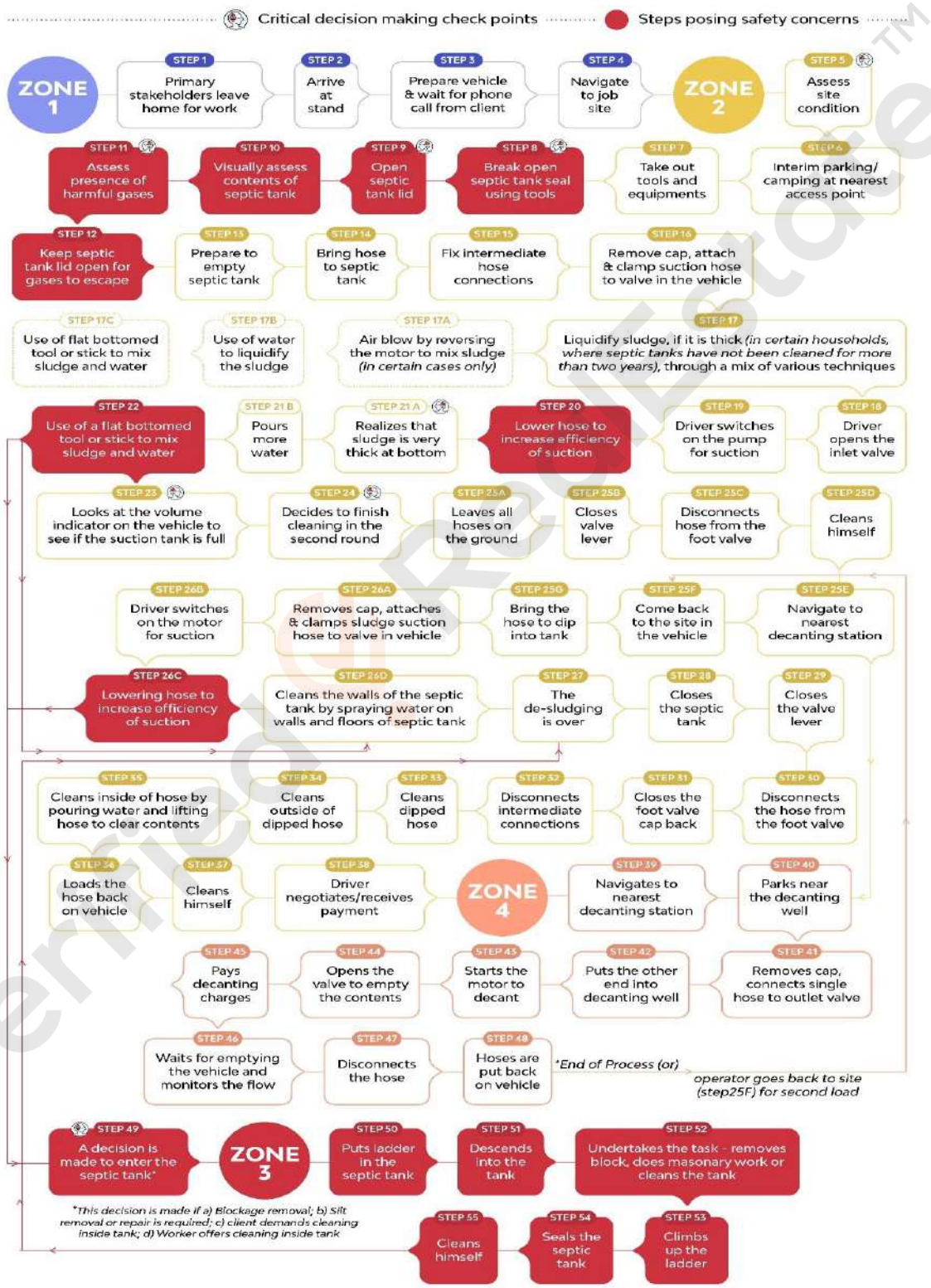

## ANNEXURE 4: APPLICATION FORM FOR LICENCE FOR COLLECTION, TRANSPORTATION AND DISPOSAL OF SEPTAGE TO PRIVATE OPERATOR WITH VEHICLE(S)

<Insert Host ULB name>

**Application Form for Issuance of Licence for Collection, Transportation and Disposal of Septage to Private Operator with Vehicle(s)**

ULBs covered under this Licence: Application number:

Application type: New / Renewal

| | | | | | |
|---|---|---|---|---|---|
| Name of the Operator (Business / Trade name) | | | | | |
| Name and Address of the Applicant | | | | | |
| Name and Address of the Vehicle owner(s)<br>- Please mention if Vehicle owner is different from applicant | | | | | |
| Contact details (Mobile number and Email) | | | | | |
| No. | Registration number | Year of registration | Vehicle type [Four-wheeler vacuum truck or Tractor with tanker or Three-wheeler mini-truck, Others (please specify)] | Vehicle capacity (in Litres) | Previous year licenced (Yes / No) |
| 1. | | | | | |
| 2. | | | | | |
| 3. | | | | | |
| 4. | | | | | |
| 5. | | | | | |
| I certify that above mentioned information given by me is true to the best of my knowledge and belief. I also certify that I have read and understood all the attached Terms and Conditions and agree to abide by them. | | | | | |
| Signature:<br><br>Date: | | | | | |

### TERMS AND CONDITIONS:

1. Definitions
   a. "Application" shall mean an application made in such form as may be specified by the Concerned ULB from time to time.
   b. "Decantation Fee" shall mean the amount payable by the Operator to the Host ULB upon each visit to the Disposal facility for the disposal of Faecal Sludge and Septage.
   c. "Disposal facility" shall mean the arrangement for the scientific treatment and disposal of Faecal Sludge and Septage, as defined and earmarked by Municipal Corporation, Municipality or Town Panchayat.

Verified RedEstate ™

d. "Faecal Sludge" shall mean raw or partially digested, in a slurry or semi solid form, the collection, storage or treatment of combinations of excreta and black water, with or without grey water.
e. "Host ULB" shall mean the ULB that owns and is responsible for the Operation & Maintenance of Faecal Sludge Treatment Plant or Sewage Treatment Plant or any other Disposal facility in the ULB Cluster.
f. "Licencee" shall mean any person or firm or self-help group or society or private company holding Licence.
g. "Operator" shall mean any person or firm or self-help group or society or private company granted the Licence to collect, transport and dispose Faecal Sludge and Septage.
h. "Septage" shall mean the liquid and solid material that is pumped from a septic tank, cesspool, or such on site treatment facility after it has accumulated over a period of time.
i. "Specified Vehicle" shall mean the vacuum truck or such other vehicle equipped with motorised pumps and storage tank owned by the ULB or Operator, of such design specification as may be approved from time to time by the ULB, for emptying and transporting Faecal Sludge and Septage.
j. "Urban Local Body (ULB)" shall mean Municipal Corporation, Municipality or Town Panchayat.
k. "ULB Cluster" shall mean the Municipal Corporations, Municipalities and Town Panchayats which together use a Faecal Sludge Treatment Plant or Sewage Treatment Plants defined as per G.O. (Ms) No. 106, Dated 01.09.2014 and G.O. (Ms) No. 88, Dated 31.08.2018 and as notified from time to time.
l. "Worker(s)" shall mean any person engaged by the Licencee for collection, transportation and disposal of Faecal Sludge and Septage.
m. Words and expressions used and not defined in these Terms and Conditions unless the context otherwise requires shall have the meaning as defined in the Tamil Nadu District Municipalities Act, 1920 (Tamil Nadu Act V of 1920) in the cases of Municipalities and Town Panchayats, the concerned Municipal Corporation Act in the cases of Municipal Corporations.

2. Any Specified Vehicle(s) permanently owned by State Government or ULB or operated by the permanent employees of State Government or ULB for the transportation of Faecal Sludge and Septage, are exempted from obtaining Licence under these Terms and Conditions.
3. The departments or agencies specified in clause 2, which are exempted from seeking Licence, shall send in advance to the Host ULB the details of the Specified Vehicle(s) that intend to use the Host ULB's Disposal facility.
4. The Application is to be submitted to the Host ULB of the ULB Cluster specified in the Application along with:
5. Vehicle(s) documents – Registration certificate, Fitness certificate, Road tax, Insurance certificate and Goods Vehicle permit.
6. Photographs of the Vehicle(s) – Front view and rear view showing number plate.
7. Documents to be produced for drivers and workers employed – Government issued Photo Identity and Address proof, Medical certificate (Issued by registered medical practitioner by the State Government) along with Driving Licence.
8. Personal Accidental Insurance policy insured for a sum of Rs.10 Lakhs (Rupees Ten Lakhs Only) each for drivers and workers employed.

Verified by RealEstate™

9. Signed undertaking to be given by Contractor in prescribed format where the cleaning and maintenance of Sewerage Systems (including Septic Tanks) is outsourced.
10. Licence Fee of Rs. 2000 (Rupees Two Thousand Only) and the mode of payment shall be prescribed by the Host ULB.
11. The Licencee shall produce the original copy of the documents for the purpose of verification. If any of the document submitted expires during the licence period, the Licencee shall obtain a new valid certificate/document on or within 30 days of the last date of the validity of the existing document. If there is any change in staff, the photocopy of Driving Licence of the driver and Government issued Photo Identity and Address proof of the workers employed shall be submitted by the Licencee within 30 days of employment. The acknowledgment receipt received from the Host ULB upon submission of the Application form, Licence Fee and necessary documents, shall be retained until Licence is approved. The Host ULB shall verify the information provided in the Application form before the issuance of the Licence. If the documents and information furnished by the applicant do not provide all the particulars necessary to process the Application satisfactorily, the Host ULB may within 15 days from the date of receipt of Application require the production of such further particulars and details as it deems necessary. The Licence should be issued by the Host ULB within 30 days after the receipt of the Application and all other requirements.
12. In cases where the Application is not in accordance with any of the applicable Acts or Rules, or where the applicant fails to furnish the additional particulars called for, or where the submitted documents cannot be authenticated, the Host ULB may reject the Application or refuse renewal of Licence for reasons to be recorded in writing, and furnish a copy of the same to the applicant. An appeal along with justification to the Host ULB shall be made within 15 days from the date of receipt of the notice refusing to grant a Licence or renew a Licence. Such appeal shall be disposed of within a period of 30 days from the date of receipt of such appeal in the first instance. Further appeal with no fee can be made by the applicant to the respective Regional Directorate of Municipal Administration for Municipalities or respective Assistant Director of Town Panchayat for Town Panchayats or Commissionerate of Municipal Administration for Municipal Corporations with timely disposal within 45 days of receipt of appeal
13. The Licence issued shall be valid for two years from the date of issue, unless revoked earlier. The Licence issued shall be prominently displayed with windshield sticker on the Specified Vehicle(s).
14. The Application for renewal of a Licence shall be made to the Host ULB in prescribed form one month before the date of expiry of the Licence and the Terms and Conditions applicable to the grant of Licence shall apply to the renewal of the Licence. The Host ULB shall dispose of such renewal Application within 30 days from the date of its receipt and not later than the expiry of the validity of the Licence. For Licence renewal, Licence Fee at the rates as may be prescribed by the Host ULB shall be paid by the applicant.
15. The Licence is valid for collection and transportation and disposal of Faecal Sludge and Septage from all buildings whether used for residential or commercial or institutional purposes within the jurisdiction of each ULB included in the ULB Cluster specified in the Application. The Licence is not valid for collection and transportation of industrial waste or mixed industrial waste of any nature whatsoever. The Licencee

Verified by RedFacts

found carrying industrial waste or mixed industrial waste shall be deemed to be in violation of the Terms and Conditions of the said Licence.

16. The Licencee shall be required to produce Licence upon demand by Executive Authority of the ULBs included in the ULB Cluster as necessary.
17. The ULBs included in the ULB Cluster shall publish the list of licenced Operators from time to time in order to ensure that the Owner or Occupier of a building or part of it located in the ULB jurisdiction engage licenced Operators for collection and transportation of Faecal Sludge and Septage. This shall include information about public complaint / grievance redressal mechanism to report violations by Operators.
18. The Licencee shall report incidents during collection to the nearest ULB included in the ULB Cluster.
19. The Licence granted by the Host ULB shall not mean exemption from requirements or Licences or clearances required for the business or trade or activity under various other applicable rules, laws and regulations.
20. The Licencee shall dispose the Faecal Sludge and Septage at the disposal facilities during the operational hours as notified by the Host ULB.
21. The Licencee has agreed to pay the Decantation Fee of Rs.100 (Rupees One Hundred Only) levied by the Host ULB for disposing Faecal Sludge and Septage at the Disposal facilities. The Decantation Fee shall be subject to revision and notified by the Host ULB from time to time.
22. The Licencee found dumping Faecal Sludge and Septage at any location or site other than at the Disposal facilities in the ULB Cluster shall be deemed to be in violation of the Terms and Conditions of the said Licence.
23. The Licencee deemed to be in violation of the Terms and Conditions of the said Licence, shall be issued show cause notice and be liable to pay the Host ULB a fine as notified by the Host ULB from time to time for each instance of violation. In case the Licencee is in repeated violation, the Host ULB shall issue show cause notice and the Licence issued may be revoked. The Operator and the Vehicle owner shall be jointly held responsible for the violations.
24. The Licencee shall maintain a log book record of each trip undertaken for collection, transportation and disposal in format as prescribed by the Host ULB and submit the same to the Host ULB every quarter.
25. The Licencee shall ensure screening of the quality of Faecal Sludge and Septage transported at the Disposal facility and provide necessary information about the location and site of collected Faecal Sludge and Septage to the facility in-charge.
26. The Licencee shall equip the Specified Vehicle(s) used for transportation of Faecal Sludge and Septage with a Global Positioning System (GPS) instrument approved by the Host ULB. The Licencee shall permit access of the GPS instrument and provide it to the ULBs included in the ULB Cluster. The Licencee shall ensure that the GPS instrument is functional and transmitting data without interruption. Interruption in data received may be considered a violation (as defined in clause 17 above).
27. The Licencee shall maintain the Specified Vehicle(s) in good and workable condition so as to avoid any accidents. Executive Authority of the ULBs included in the ULB Cluster may inspect and regulate the quality and maintenance of the Specified Vehicle(s).
28. The Licencee shall ensure no leakage/spillage of Faecal Sludge and Septage during transportation from the collection point to the Disposal facility. In the event of accidental spillage of Septage, the Licencee shall immediately take action to contain the Septage,

Verified by RedlEstate™

minimise the environmental impact, and remove all Septage immediately from the sites of spillage. The Licencee shall notify the nearest located ULB in the ULB Cluster where the event took place about the spillage and action taken within 24 hours of the occurrence of the event.

29. The Licencee shall ensure that each driver and worker employed undergoes periodic training and participates in other activities organised by each ULB included in the ULB Cluster from time to time.
30. The Licencee shall ensure all drivers and workers employed follow Standard Operating Procedures for Sewer and Septic Tanks - Mechanised cleaning as per Circular Roc. No. 11333/2015/J2, dated 10.05.2019 and other guidelines notified from time to time, ensure procurement and usage of safety gears during collection, transportation and disposal of Faecal Sludge and Septage.
31. The Licencee shall ensure that each driver and worker employed undergoes health check-up at the State Government approved hospital and shall submit a record of the same to Host ULB at the time of renewal of Licence.
32. The Licencee shall insure each driver and worker employed for an individual sum of Rs.10 Lakhs (Rupees Ten Lakhs Only) towards Personal Accidental Insurance every year and submit the policy document to the Host ULB at the time of renewal of Licence.
33. In case of violation of any of the provisions of G.O. (Ms) No. 293, Municipal Administration and Water Supply Department, dated 26.11.2010 – Ban on entry of workers into the Sewerage System and Septic Tanks including the Prohibition of Employment as Manual Scavengers and their Rehabilitation Act, 2013 (Central Act 25 of 2013), and Circular Roc. No. 11333/2015/J2, dated 10.05.2019, the Licencee shall be issued show cause notice by the Host ULB, liable to a fine as notified by the State Government from time to time and shall result in revocation of the Licence.
34. The Licencee shall comply with the provisions of the G.O. (Ms) No. 106, Municipal Administration and Water Supply Department, dated 01.09.2014 – Operative Guidelines for Septage Management for Urban and Rural Local Bodies in Tamil Nadu, Tamil Nadu District Municipalities Act, 1920 (Tamil Nadu Act V of 1920) in the cases of Municipalities and Town Panchayats, the concerned Municipal Corporation Act in the cases of Municipal Corporation and all local legislations and bye-laws as may be applicable from time to time to the activities being performed under this Licence.
35. The Host ULB reserves the right to revise any of the conditions of this Licence or impose further conditions from time to time during the validity of this Licence.

It is hereby undertaken that the above stated Terms and Conditions have been clearly understood and fully agree to abide by the same.

Date: Name: Signature:

| **Driver / Worker Details (To be filled)** | | |
|---|---|---|
| S. No. | Full Name | Government issued Photo ID and Address Proof Type and Number |

Verified by RedEstate™

| | | |
|---|---|---|
| | | |
| | | |

**Format of the Undertaking to be given by Contractor in cases where the cleaning and maintenance of Sewerage Systems (including Septic Tanks) is outsourced**

1. I (Name, Age, Father's name and Address of the Contractor) am aware of the directions of the Hon'ble High Court of Madras in its order dated 21.2008 in W.P.No.24403/2008. And the orders of the Government of Tamil Nadu in G.O (MS) No.293, M.A & W.S (MW) Department, dated 26.11.2010, regarding the ban on manual scavenging and on the entry of sanitary workers into the sewerage system or septic tank. I undertake to abide by the said directions of the High Court and Government Order in this regard.
2. I shall not allow sanitary workers to enter into the sewerage systems/septic tank for cleaning or maintenance operations except on the 4 circumstances permitted in the orders of the High Court in W.P.No.24403, dated 20.11.2008.
   I am aware that even in these 4 circumstances, I should allow the workers to enter only with adequate safety gadgets and under the supervision of a qualified staff, and only after duly observing all safety precautions including testing for the presence of toxic gases.
3. I am aware that violation of the said directions of the Hon'ble High Court and the G.O will attract punishment under section 1 of the Employment of Manual Scavengers and Construction of Dry Latrines (Prohibition) Act, 1993.

Signature of the Contractor

Date

| S.No. | Form / Document | Submitted for Vehicle(s) | | | | |
|---|---|---|---|---|---|---|
| | | 1 | 2 | 3 | 4 | 5 |
| 1. | Registration certificate | | | | | |
| 2. | Fitness certificate | | | | | |
| 3. | Road tax | | | | | |
| 4. | Insurance certificate | | | | | |
| 5. | Vehicle permit | | | | | |
| 6. | Photographs of the Vehicle(s) – Front and Rear side showing number plate | | | | | |
| 7. | Government Photo ID and Address proof – Drivers and Workers | | | | | |
| 8. | Medical certificate – Drivers and Workers | | | | | |
| 9. | Personal Accident Insurance policy – Drivers and Workers | | | | | |
| 10 | Driving Licence (s) | | | | | |

Verified RegiEstate™

| | | |
|---|---|---|
| **11.** | Signed undertaking to be given by in prescribed format in cases where the cleaning and maintenance of Sewerage Systems (including Septic Tanks) is outsourced | |

I hereby certify that I have enclosed all the above-mentioned documents correctly to the best of my knowledge and that nothing has been concealed by me.

Date: <Signature of the applicant>

NOTE – Please bring the original documents whose attested photocopies have been attached with the file.

** For office use only **

**OBJECTIONS**

**(A) The following Forms/Documents have NOT been attached/completed in the file:**

| **S.No.** | **Form / Document** |
|---|---|
| **1.** | |
| **2.** | |
| **3.** | |
| **4.** | |
| **5.** | |
| **Any other objections / observations:** | |

**(B) Certified that I have checked the file and the same is fit**

Date: Signature of the Executive Authority of the <Insert ULB name>

**Private Operator Licence Template**

Verified RedEstate ™

## ANNEXURE 5: ULB-WISE CAPACITY OF STPs AND FSTPs PRESENT FLOW AND PERCENT UTILISATION

**Table 1: ULB-wise Capacity of STPs Present Flow and Percent Utilization**

| S. No. | Name of ULB | Year of commissioning | Capacity (in MLD) | Technology | Inflow (in MLD) | % of utilization |
|---|---|---|---|---|---|---|
| 1 | Chennai (13) | | 745.00 | | 598.71 | 80% |
| 2 | Arakonam | 2019 | 11.40 | ASP | 3 | 26% |
| 3 | Ariyalur | 2018 | 4.16 | ASP | 0.7 | 17% |
| 4 | Avadi (2) | | 40.00 | SBR | 1 | 3% |
| 5 | Bodinayakkanur | 2018 | 12.08 | ASP | 2.5 | 21% |
| 6 | Chidambaram | 2020 | 9.44 | ASP | 2.4 | 25% |
| 7 | Chinnamanur | 2011 | 3.99 | ASP | 3 | 75% |
| 8 | Coimbatore (2) | | 130.00 | SBR | 33 | 25% |
| 9 | Cuddalore | 2010 | 12.25 | ASP | 5 | 41% |
| 10 | Dharmapuri | 2009 | 4.86 | ASP | 1 | 21% |
| 11 | Dindigul | 2012 | 13.65 | ASP | 2.5 | 18% |
| 12 | Erode | 2019 | 50.55 | MBBR | 20 | 40% |
| 13 | Kanchipuram | 2010 | 14.70 | WSP | 14.7 | 100% |
| 14 | Karur | 2005 | 15.00 | ASP | 15 | 100% |
| 15 | Krishnagiri | 2016 | 9.00 | ASP | 6.7 | 74% |
| 16 | Kumbakonam | 2002 | 17.00 | ASP | 9 | 53% |
| 17 | Madurai (2) | 2010 | 170.70 | SBR | 25 | 15% |
| 18 | Mamallapuram | 2015 | 2.34 | ASP | 1 | 43% |
| 19 | Maraimalainagar | 2010 | 2.20 | ASP | 2.2 | 100% |
| 20 | Mayiladuthurai | 2005 | 5.85 | WSP | 6.07 | 104% |
| 21 | Mettur (3) | | 7.20 | ASP | 0.27 | 4% |
| 22 | Nagapattinam (2) | 2016 | 12.73 | ASP | 4.5 | 35% |
| 23 | Namakkal | 2013 | 5.00 | ASP | 5 | 100% |
| 24 | Orathanadu | 2014 | 1.50 | ASP | 1.2 | 80% |
| 25 | Pallavapuram | 2011 | | ugss only | | |
| 26 | Perambalur | 2010 | 4.20 | ASP | 3.6 | 86% |
| 27 | Periyakulam | 2017 | 5.47 | ASP | 3.3 | 60% |
| 28 | Pudukottai | 2017 | 10.62 | ASP | 4.5 | 42% |
| 29 | Ramanathapuram | 2013 | 7.00 | ASP | 5 | 71% |

Verified RealEstate ™

| | | | | | | |
|---|---|---|---|---|---|---|
| 30 | Rasipuram | 2020 | 6.96 | ASP | 2 | 29% |
| 31 | Salem (3) | | 24.45 | ASP | 2 | 8% |
| 32 | Sathiyamangalam | 2021 | 4.00 | MBBR | 0 | under commissioning |
| 33 | Sivagangai | 2021 | 4.90 | EASP | 1.7 | 35% |
| 34 | Tambaram | 2021 | 30.00 | SBR | 0 | under commissioning |
| 35 | Thanjavur | 2001 | 24.00 | ASP | 18 | 75% |
| 36 | Theni | 2014 | 12.05 | ASP | 5.6 | 46% |
| 37 | Theni Palanichetti patti (TP) | 2015 | | ugss only | | |
| 38 | Thiruchendur | 2017 | 4.39 | ASP | 0.6 | 14% |
| 39 | Thirumazhisai | 2019 | 3.00 | ASP | 0.5 | 17% |
| 40 | Thirupathur | 2021 | 11.43 | ASP | 2.8 | 25% |
| 41 | Thiruvannamalai | 2013 | 8.70 | ASP | 2.5 | 29% |
| 42 | Thoothukudi | 2021 | 28.00 | ASP | 0 | under commissioning |
| 43 | Tirunelveli | 2007 | 24.20 | WSP | 8 | 33% |
| 44 | Tiruppur | 2007 | 15.00 | ASP | 8 | 53% |
| 45 | Tiruvallur | 2016 | 6.20 | MBBR | 2 | 32% |
| 46 | Tiruvarur | 2014 | 6.92 | ASP | 4 | 58% |
| 47 | Trichy | 2007 | 58.00 | WSP | 55.32 | 95% |
| 48 | Udumalpet | 2013 | 7.81 | ASP | 3.5 | 45% |
| 49 | Uthagamandalam | 1992 | 5.00 | ASP | 4 | 80% |
| 50 | Velankanni | 2021 | 2.33 | ASP | 0 | under commissioning |
| 51 | Vellore | 2015 | 10.00 | ASP | 7.5 | 75% |
| 52 | Villupuram (2) | | 12.50 | ASP | 7.4 | 59% |
| 53 | Viruthunagar | 2014 | 7.65 | ASP | 3.3 | 43% |
| **Total** | | | **1645.38** | | **918.57** | **49%** |

**Table 2: ULB-wise Capacity of FSTPs' and Percent Utilization**

| No | Name of the ULBs | Year of Commissioning | Capacity in KLD | Technology | % of Utilization |
|---|---|---|---|---|---|
| 1 | Kangeyam | 2020 | 20 | Screen chamber, Anaerobic stabilization of FS followed by natural solar sludge drying beds, sludge storage and co-composting for the solid | 5 |
| 2 | Kovilpatti | 2020 | 40 | | 20 |
| 3 | Tirumangalam | 2020 | 40 | | 20 |

Verified RealEstate

| | | | | | |
|---|---|---|---|---|---|
| 4 | Dharapuram | 2020 | 30 | stream; Integrated settler anaerobic filter, planted gravel filter and Maturation Pond for liquid stream | 10 |
| 5 | Sengottai | 2021 | 20 | | 20 |
| 6 | Thuraiyur | 2021 | 20 | | 20 |
| 7 | Edappadi | 2021 | 30 | | 20 |
| 8 | Vickramasingapuram | 2021 | 30 | | 10 |
| 9 | Kadayanallur | 2021 | 40 | | 20 |
| 10 | Pattukottai | 2021 | 30 | | 10 |
| 11 | Tiruchengode | 2021 | 40 | | 10 |
| 12 | Melur | 2021 | 20 | | 5 |
| 13 | Ambasamudiram | 2021 | 30 | | 10 |
| 14 | Mannargudi | 2021 | 30 | | 10 |
| 15 | Karunguzhi | 2017 | 23 | Screen chamber, FS followed by natural solar sludge drying beds, sludge storage and co-composting for the solid stream; planted gravel filter and Maturation pond for liquid stream | 90 |
| 16 | Periyanaicken-palayam | 2019 | 25 | Bar screen & Grid chamber, Raw faecal storage tank, Screw Press, MBBR, Sand & Carbon filter and UV treatment | 80 |

Verified RealEstate ™

## ANNEXURE 6: STP/FSTP CLUSTERS AND RURAL BODIES

| Table 1: Existing STPs and Town Panchayats and Panchayat Unions | | | |
|---|---|---|---|
| **S No** | **Municipality** | **Nearest Town Panchayat** | **Panchayat Union** |
| 1 | Chennai | Naravarikuppam,Mangadu | Thomas Malai |
| 2 | Tiruverkadu | | Poonamallee, Villivakkam |
| 3 | Tiruvannamalai | | Tiruvannamalai |
| 4 | Chinnamanur | Odaipatti, Markayankottai, Kuchanur, Uthamapalayam, Hanumanthampatti. | Chinnamanur, Uthamapalayam |
| 5 | Coimbatore | Pallapalayam, Irugur, Vellalur, Kannampalayam, Sulur, Perur, Vedapatti. | SS Kulam |
| 6 | Cuddalore | | Cuddalore |
| 7 | Dharmapuri | | Dharmapuri, Nallamoalli |
| 8 | Dindigul | | Dindigul |
| 9 | Kancheepuram | | Kancheepuram |
| 10 | Karur | Puliyur | Karur |
| 11 | Krishnagiri | | Krishnagiri |
| 12 | Kumbakonam | Thirupuvanam, Thirunageswaram, Thiruvidaimarudur, Veppathur Aduthurai alias Maruthuvakudi | Kumbakonam |
| 13 | Madurai | | Madurai |
| 14 | | Mamallapuram | Tirupporur |
| 15 | Maraimalainagar | | Kttankolathur |
| 16 | Mayiladuthurai | | Mayiladuthurai |
| 17 | Nagapattinam | Tittacheri | Nagapattinam |
| 18 | Namakkal | | Namakkal |
| 19 | | Orathanadu | Orathanadu |
| 20 | Perambalur | | Perambalur |
| 21 | Pudukkottai | | Pudukkottai |
| 22 | Ramanathapuram | | Ramanathapuram |
| 23 | Thanjavur | | Thanjavur |
| 24 | Theni Allinagaram | Boothipuram, Veerapandi | Theni Allinagaram |
| 25 | | Palani Chettipatti | Theni |
| 26 | | Melachokkanathapuram | Bodinayakanur |
| 27 | Tiruchendur | | Tiruchendur |
| 28 | Kayalpattinam | | |
| 29 | Tiruchirappalli | | Thiruverambur |
| 30 | Tirunelveli | Naranammalpuram, Sankarnagar | Palayamkottai |
| 31 | Tiruppur | | Tiruppur |
| 32 | Thiruvallur | | Thiruvallur |
| 33 | Thiruvarur | | Thiruvarur |
| 34 | Udhagamandalam | | Udhagamandalam |

Verified RealEstate ™

| Table 1: Existing STPs and Town Panchayats and Panchayat Unions | | | |
|---|---|---|---|
| **S No** | **Municipality** | **Nearest Town Panchayat** | **Panchayat Union** |
| 35 | Udumalaipettai | | Udumalaipettai |
| 36 | Vellore | | Vellore |
| 37 | Viluppuram | Valavanur | |
| 38 | Virudhunagar | | Virudhunagar |
| 39 | Periyakulam | Thenkarai, Thamaraikulam, Vadugapatti, Devadanapatti | Periyakulam |
| 40 | Avadi | Thirunindravur | Poonamalle, Villivakkam |
| 41 | Salem | Karuppur, Ayothiapattinam | Salem |
| 42 | Ariyalur | | Ariyalur |
| 43 | Bodinayakanur | B. Meenakshipuram | Bodinayakanur |
| 44 | Erode | Modakurichi, Jambai | Pallipalayam, Erode |
| 45 | Pallipalayam | | |
| 46 | Bhavani | | |
| 47 | Mettur | P.N.Patti, Veerakkalpudur | |
| 48 | Arakonam | | Arakonam |
| 49 | Kodaikanal | | Kodaikanal |
| 50 | Rasipuram | Vedapatti, Pattinam, Athanur, Seerapalli, Pillanallur, Kannankurichi, Panaimarathupatti | Rasipuram |
| 51 | Sivaganga | | Sivaganga |
| 52 | Poonamallee | Thirumazhisai, Kundrathur | Poonamallee |
| 53 | Thoothukkudi | | Thoothukkudi |
| 54 | Chidambaram | Annamalai Nagar, Bhuvanagiri | Kumaratchi |
| 55 | | Sriperumbudur | Sriperumbudur |
| 56 | Karaikkudi | | Sakkottai |
| 57 | Hosur | | Hosur |
| 58 | Mettupalayam | Karamadai, Sirumugai. | Karamadai |
| 59 | Nagercoil | Suchindrum, Therur, Puthalam, Mylaudy, Marungur | Rajakkamangalam |
| 60 | | Perundurai | Perundurai |
| 61 | Pollachi | Suleeswaranpatti, Zamin, Uthukuli, Samathur | Pollachi |
| 62 | Rameswaram | | Mandapam |
| 63 | Sathyamangalam | Ariyappampalayam, Periyakodiveri, Kembainaickenpalayam | Sathyamangalam |
| 64 | Sattur | | Sattur |
| 65 | Tambaram | | Thomai mount |
| 66 | Tirupathur | Jolarpet | Tirupathur,Jolarpet |
| 67 | Ulundurpettai | | Ulundurpettai |
| 68 | Ambur | | Madhanur |
| 69 | Rajapalayam | Mamsapuram | Rajapalayam |

Verified RedEstate™

| Table 1: Existing STPs and Town Panchayats and Panchayat Unions | | | |
|---|---|---|---|
| **S No** | **Municipality** | **Nearest Town Panchayat** | **Panchayat Union** |
| 70 | | Velankanni | Keelaiyur |
| 71 | | Thiruporur | Thiruporur |
| 72 | Ponneri | | Minjur,Sholavaram |
| 73 | | Manachanallur | Manachanallur |
| 74 | | S. Kannanur | Manachanallur |
| 75 | | Vallam | Thanjavur |
| 76 | Palani | Balasamudram, Neikkarapatti, Ayakudi | Palani |
| 77 | Tindivanam | | Olakkur |

| Table 2: Existing FSTPs and Town Panchayats and Panchayat Unions | | | |
|---|---|---|---|
| **S. No** | **Municipality** | **Nearest Town Panchayat** | **Panchayat Union** |
| 1 | Virudachalam | | Virudachalam |
| 2 | Chengalpattu | | Kattankolathur |
| 3 | Nellikuppam | Melpattampakkam | Annagramam,Chuddalore |
| 4 | Panruti | Thorapadi | Panruti |
| 5 | Vandavasi | | Vandavasi |
| 6 | Walajapet | Ammoor | Arcot |
| 7 | Ranipet | | |
| 8 | Arcot | | |
| 9 | Gudiyatham | | Gudiyatham |
| 10 | Vaniyampadi | | Natrampalli |
| 11 | Kulithalai | Marudur | Kulithalai |
| 12 | Tiruchen gode | | Tiruchen gode |
| 13 | Attur | | Attur |
| 14 | Narasingapuram | | |
| 15 | Idappadi | Arasiramani, Poolampatti,Konganapuram | Idappadi |
| 16 | Melur | A.Vellalapatti | Melur |
| 17 | Keelakarai | | Tiruppulani |
| 18 | Paramakudi | | Paramakudi |
| 19 | Tirumangalam | | Tirumangalam |
| 20 | Cumbum | Pudupatti, Kamayagoundanpatti | Cumbum |
| 21 | Gudalur | | Gudalur |
| 22 | Usilampatti | | Usilampatti |
| 23 | Dharapuram | Kolathupalayam | Dharapuram |
| 24 | Kangeyam | | Kangeyam |
| 25 | Coonoor | Jagathala, Kethi | Coonoor |
| 26 | Jayamkondam | Udayarpalayam | Jayamkondam |
| 27 | Mannargudi | | Mannargudi |

Verified RedEstate ™

| Table 2: Existing FSTPs and Town Panchayats and Panchayat Unions | | | |
|---|---|---|---|
| S. No | Municipality | Nearest Town Panchayat | Panchayat Union |
| 28 | Pattukottai | | Pattukottai |
| 29 | Thuraiyur | | Thuraiyur |
| 30 | Aranthangi | | Aranthangi |
| 31 | Manapparai | | Manapparai |
| 32 | Sirkali | Vaitheeswarankoil | Sirkali |
| 33 | Vedharanyam | | Vedharanyam |
| 34 | Thiruthuraipoondi | | Thiruthuraipoondi |
| 35 | Koothanallur | Koradacheri | Mannargudi |
| 36 | Shenkottai | Ilanji, Pudur,Courtalam | |
| 37 | Srivilliputhur | | Srivilliputhur |
| 38 | Vickramasingapuram | Alwarkurichi | Ambasamudram |
| 39 | Aruppukottai | | Aruppukottai |
| 40 | Colachel | Reethapuram,Kallukuttam,Palappallam,Mandaikadu,Thingalnagar,Karungal,Neyyoor,Manavalakurichi,Kappiyarai | Kuruthancode |
| 41 | Kadayanallur | | Kadayanallur |
| 42 | Kovilpatti | | Kovilpatti |
| 43 | Sivakasi | | Sivakasi |
| 44 | Thiruthangal | | |
| 45 | Ambasamudram | Koradacheri, Kalladaikurichi, Manimutharu | Ambasamudram |
| 46 | Puliangudi | Vasudevanallur | Vasudevanallur |
| 47 | Sankarankoil | | Sankarankoil |
| 48 | Tenkasi | Melagaram, Panpoli, Achampudur, Aygudi, Vadakarai Keezhpadugai | Tenkasi |
| 49 | Padmanabhapuram | Kothanallur, Kumarapuram, Vilavur, Thiruvithancode, Mulagumudu, Villukuri, Eraniel, Verkilambi | Thuckalay |
| 50 | Kulithurai | Unnamalaikadai, Nalloor, Valvaithankoshtam, Athur, Pacode, Thiruvattar, Kaliyakkavilai, Puthukkadai, Killiyoor, Kulasekaram | Melpuram |
| 51 | Madurandagam | Karunguzhi | Madurandagam |
| 52 | | Pennadam | Kattumannarkoil |
| 53 | | Pennagaram | Pennagaram |
| 54 | | Chengam | Chengam |
| 55 | | Kaveripattinam | Kariyamagalam,Kaveripattinam |
| 56 | | Alangayam | Alangayam |
| 57 | | Jalakandapuram | Tharamangalam |

Verified RedEstate ™

| Table 2: Existing FSTPs and Town Panchayats and Panchayat Unions | | | |
|---|---|---|---|
| **S. No** | **Municipality** | **Nearest Town Panchayat** | **Panchayat Union** |
| 58 | | Mudukulathur | Mudukulathur |
| 59 | | Kurumbalur | Perambalur |
| 60 | Gudalur | Periyanaicken-palayam ,Veerapandi, Idikarai,Narasimhanaicken palayam | Periyanaicken-palayam |

Verified RealEstate ™

## ANNEXURE 7: DECANTING FACILITY DESIGN

**Figure 1: Septage Receiving Station- Type Design- 1**

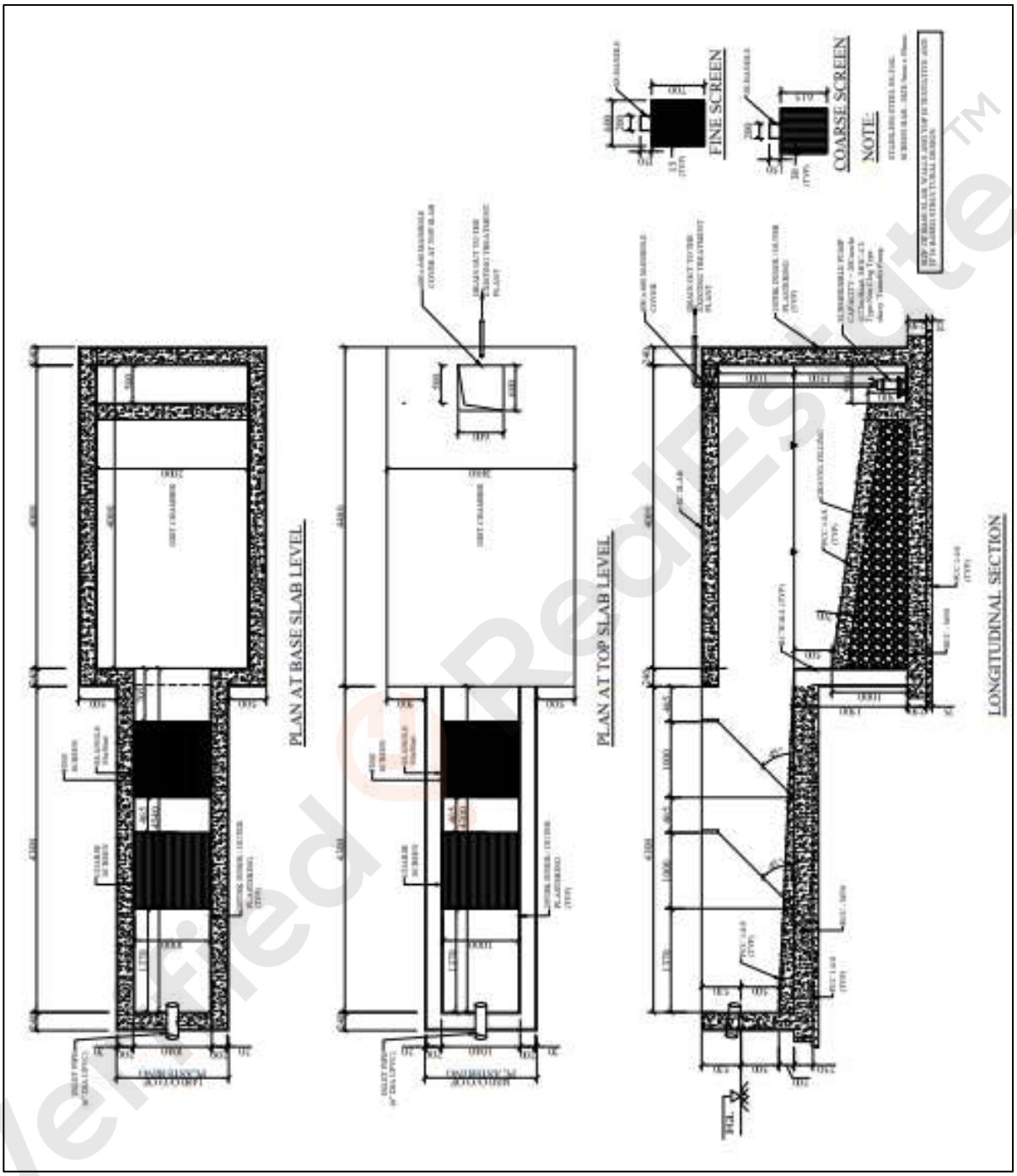


Verified RealEstate™

**Figure 2: Septage Receiving Station- Type Design- 2**

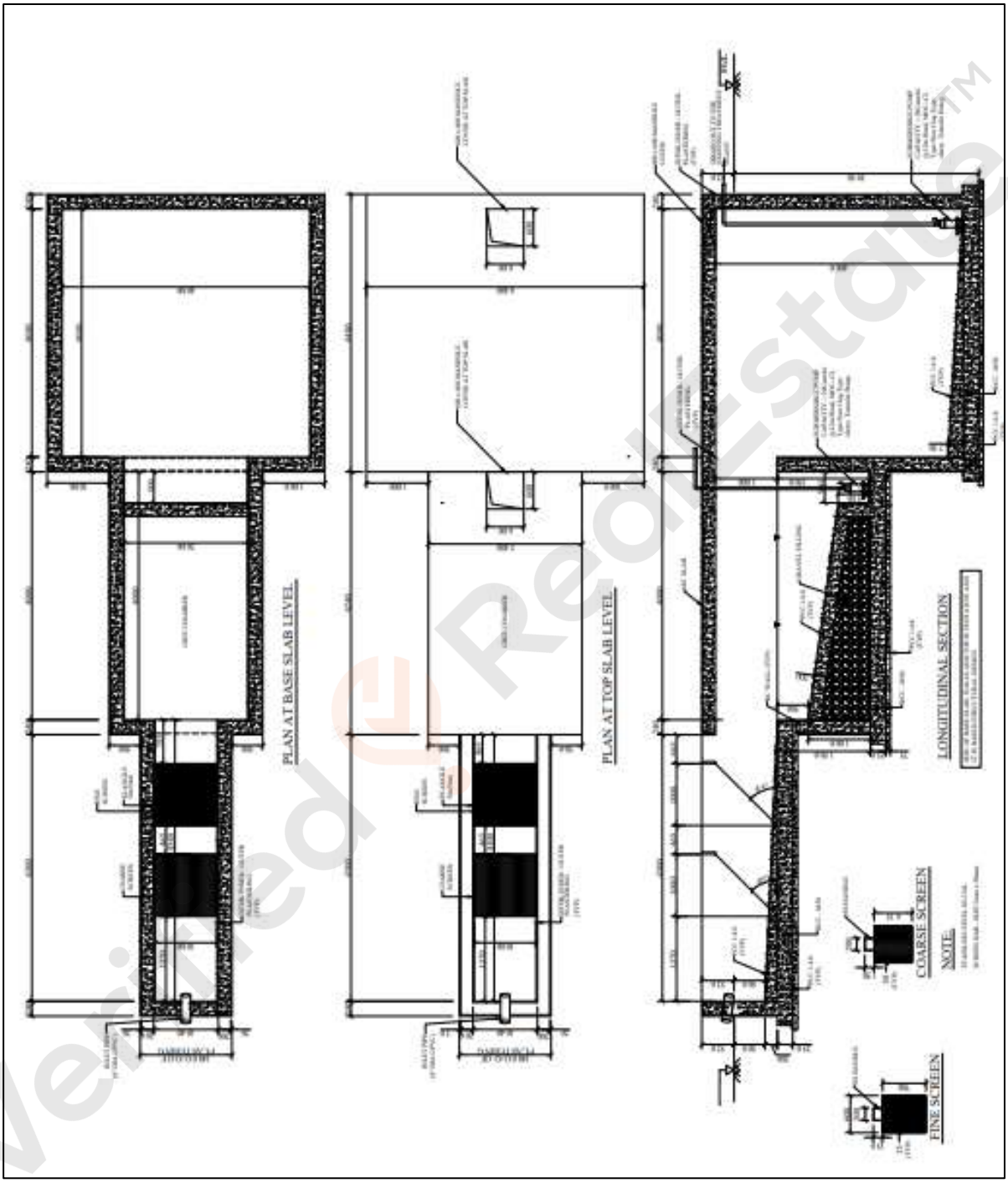


Verified RedEstate™

## ANNEXURE 8: CHECKLIST FOR ASSESSMENT OF STPS AND PUMP HOUSES FOR CO-TREATMENT OF FAECAL SLUDGE

### 1. Checklist for Assessment of STPs for Co-treatment of Faecal Sludge

| I. CITY DETAILS | | |
|---|---|---|
| 1. | Name of Corporation/Municipality | |
| 2. | District Name | |
| 3. | Name of Assessor | |
| 4. | Name and Designation of Key contact | |
| 5. | Mobile Number. | |
| 6. | Email Id | |
| 7. | Office address | |
| 8. | Date of Assessment | □□□□□□□□<br>Date Month Year |
| 9. | Previous Date of Assessment if any and visit reference number | □□□□□□□□<br>Date Month Year<br><br>Reference Number: SV---- |

| II. DESIGN OF SEWAGE TREATMENT PLANT | | |
|---|---|---|
| 5. | Design inlet BOD and TSS levels (in mg/l) | a) BOD:□□<br><br>b) TSS:□□ |
| 6. | Total area and estimated population served by the STP | a) Area:<br>b) Population: |
| 7. | No. of connections (HSCs) connected to the UGD network | □□□□□□ |
| | No. of connections planned (under progress) | □□□□□□ |
| | No. of left out connections | □□□□□□ |
| 8. | Year of commissioning | □□□□ |

| III. LOCATION AND ACCESS DETAILS | | |
|---|---|---|
| 1. | Distance of the STP from the SPS? (in km) | a) □□<br>b) No pumping station □(Go to Q.3) |
| 2. | What areas within the city are served by the STP? | |
| 3. | What type of neighborhood is the STP located in? (TICK IN THE BOX GIVEN AGAINST THE OPTIONS) | a) Largely residential □<br><br>b) Densely populated □ |

Verified by RealEstate™

| | | |
|---|---|---|
| | | c) Near market area ☐<br>d) Outskirt/periphery areas ☐<br>e) Others (Specify) ☐<br>---------- |
| 4. | What is the distance to the nearest residence from the STP? (TICK IN THE BOX GIVEN AGAINST THE OPTIONS) | a) < 100 m ☐<br>b) 100 – 300 m ☐<br>c) 300 – 500 m ☐<br>d) >500 m ☐ |
| 5. | Does the access road pass through areas of habitation? (TICK IN THE BOX GIVEN AGAINST THE OPTIONS) | a) Yes ☐(Continue)<br>b) No ☐(Go toQ.7) |
| 6. | Will there be challenges in passage of vehicle through residential areas/ markets etc.? (TICK IN THE BOX GIVEN AGAINST THE OPTIONS) | a) Yes ☐<br>b) No ☐ |
| 7. | Type of external access- roads to the STP (TICK IN THE BOX GIVEN AGAINST THE OPTIONS) | |
| | **a) Type** | **b) Width** / **c) Condition** |
| | i. Single-lane☐<br>ii. Two lane-undivided☐<br>iii. Two lane-divided☐<br>iv. Multi-lane☐<br>v. Others ☐<br>(Specify)<br>---------- | i. <3 m☐<br>ii. 3-4.5m☐<br>iii. 4-7m☐<br>iv. >7m☐ / i. Paved and in good condition☐<br>ii. Paved but road condition requires improvement (eroded / potholes)☐<br>iii. Unpaved Road☐<br>iv. Others (Specify)☐<br>---------- |

| | | | |
|---|---|---|---|
| **IV. STP PERFORMANCE** | | | |
| 1. | Current average daily flow received at the STP? (in MLD) | ☐☐.☐☐ | |
| | **Flow meter readings:** | Meter reading in cu.m | Date |
| | a. On the day of visit:<br>b. The day before:<br>c. The day before a week:<br>d. The day before a month: | | |

Verified RealEstate ™

| | | KWh | Date |
|---|---|---|---|
| | **Energy meter readings:**<br>a. On the day of visit:<br>b. The day before:<br>c. The day before a week:<br>d. The day before a month: | | |

2. Describe the treatment train (treatment units) at the STP (Individual units, and their capacities with power ratings)

| Equipment | Quantity (W+S) | Capacity (Cu.m/hr.) | Power (hp) | Status |
|---|---|---|---|---|
| Feed pump | | | | |
| Bar screen | | | | |
| Clarifier Primary | | | | |
| Clarifier secondary | | | | |
| Aerator | | | | |
| Return Sludge pump | | | | |
| Chlorine booster | | | | |
| Centrifuge | | | | |
| Others –specify | | | | |
| Others –specify | | | | |
| Others –specify | | | | |
| Others –specify | | | | |
| Others –specify | | | | |

3. If available, provide monthly average BOD & TSS at the inlet and outlet of each process unit in mg/l as analyzed for the last 2 years:

| Month | BOD | | TSS | | Month | BOD | | TSS | |
|---|---|---|---|---|---|---|---|---|---|
| | In | Out | In | Out | | In | Out | In | Out |
| January | | | | | July | | | | |
| February | | | | | August | | | | |
| March | | | | | September | | | | |
| April | | | | | October | | | | |
| May | | | | | November | | | | |
| June | | | | | December | | | | |

Collect the sample to check below values on the date of visit

| Sewage characteristics | Pump house | Collection Tank | Aeration Tank | Clarifier | Outlet water |
|---|---|---|---|---|---|
| 1. BOD | | | | | |
| 2. COD | | | | | |
| 3. Total | | | | | |

Verified RedEstate ™

| | | | | | | |
|---|---|---|---|---|---|---|
| | suspended solids | | | | | |
| | 4. Turbidity | | | | | |
| | 5. pH | | | | | |
| | 6. Total Dissolved solids | | | | | |
| | 7. SV 30 | - | - | | - | - |

| | | |
|---|---|---|
| 4. | Type of receiving body/ environment for disposal of the treated wastewater (TICK IN THE BOX GIVEN AGAINST THE OPTIONS) | a) River ☐<br>b) Stream ☐<br>d) Land ☐<br>e) Irrigation ☐<br>f) Others (Specify)☐<br>---------- |

5. Civil work details:

| Name of tank | Quantity | Size in m (L X M X H + F.B) | Volume (Cu.m) | Status |
|---|---|---|---|---|
| Bar screen chamber | | | | |
| Collection tank | | | | |
| Aeration tank | | | | |
| Clarifier | | | | |
| Sludge tank | | | | |
| Leachate tank | | | | |
| Sludge drying beds | | | | |
| Others –specify | | | | |
| Others –specify | | | | |
| Others –specify | | | | |
| Others –specify | | | | |
| Others –specify | | | | |
| Others –specify | | | | |

| | |
|---|---|
| 6. | Quantity of water being discharged without treatment or bypass arrangement to divert the sewage without treatment. |
| 7. | Attach/Draw the process flow diagram. Attach separately as scanned copy |

Verified RealEstate ™

| | | |
|---|---|---|
| 8. | Attach/Draw the layout diagram. Attach separately as scanned copy | |
| 9. | Attach site photographs of each mechanical unit and tank: | |
| 10. | Describe the sludge handling system adopted and methods of solid disposal: | |
| **V. FINAL DISCHARGE/REUSE OF TREATED WATER** | | |
| 1. | Process adopted for sludge treatment (drying beds/mechanical dewatering/any other method) with capacity details | |
| | a) Process | |
| | b) Capacity | |
| 2. | Is treated water reused for any purpose? (TICK IN THE BOX GIVEN AGAINST THE OPTIONS) | a) Yes ☐(Continue)<br>b) No ☐(Go toQ.6) |
| 3. | If **YES**, please provide details | a) Irrigation ☐<br>b) Sale to industry ☐<br>c) Sale to commercial establishments ☐<br>d) Others (Specify)☐<br>---------- |
| 4a. | Are there specific water quality criteria that are required to be met by the STP? (TICK IN THE BOX GIVEN AGAINST THE OPTIONS) | a) Yes ☐(Continue)<br>b) No ☐(Go toQ.6) |
| 4b. | If, **YES** please describe the same | |
| 5. | List of non-compliances if any reported by the Pollution control board/court if any: | |
| 6. | List out any structural damages & malfunctioning of process units /equipment. | |
| **V. OPERATIONAL ISSUES AND WORKING ENVIRONMENT** | | |

Verified RealEstate ™

| | | |
|---|---|---|
| 7a. | Is there concern of odor from the STP in its current state of operation? (TICK IN THE BOX GIVEN AGAINST THE OPTIONS) | a) Yes ☐(Continue)<br>b) No ☐(GO TO SECTION VI) |
| 7b. | If **YES**, please specify if specific units are a concern. | |

**SECTION VI SEEKS INFORMATION ON THE FOLLOWING:**

- **Co-treatment at STP**
- **Availability of space within the STP including internal access**
- **Existing STP infrastructure**

| **VI. AVAILABILITY OF SPACE AND EXISTING INFRASTRUCTURE** | | |
|---|---|---|
| 1. | Does the STP currently receive faecal sludge for co-treatment? | a) Yes ☐(Continue)<br>b) No ☐(Go to Q.6) |
| 2. | If **YES**, since when (Year) has the STP been receiving faecal sludge? | ☐☐☐☐ |
| 3. | On an average, how many trucks empty faecal sludge in a day at the STP? | ☐☐ |
| 4. | What is the average capacity of the trucks that empty faecal sludge at the STP? (in liters) | ☐☐☐☐☐ |
| 5. | Average volume of faecal sludge received in a week (in MLD) | ☐☐ |
| 6. | What are challenges faced by the STP in receiving faecal sludge? For example, poor external and internal access, odour, lack of human resource, etc. | |
| 7. | Is the internal access road to STP wide enough for the septage truck (3.5 m width, 9 m length, dimensions to be confirmed) movement? (TICK IN THE BOX GIVEN AGAINST THE OPTIONS) | a) Yes ☐<br>b) No ☐ |
| **VI. AVAILABILITY OF SPACE AND EXISTING INFRASTRUCTURE** | | |
| 8. | Is there enough space within the STP premises for a septage truck (3.5 m width, 9 m length, dimensions to be confirmed) to enter, turn around and exit? (TICK IN THE BOX GIVEN AGAINST THE OPTIONS) | a) Yes ☐<br>b) No ☐ |
| 9. | Is there a point such as collection well etc. in which the septage trucks can empty septage/ faecal sludge/ sewage from ground level (TICK IN THE BOX GIVEN AGAINST THE OPTIONS) | a) Yes ☐(Go to Q.12)<br>b) No ☐(Continue) |
| 10. | If the response '**NO'** to above question, can a simple ramp be constructed for the trucks to empty? (TICK IN THE BOX GIVEN AGAINST THE OPTIONS) | a) Yes ☐(Go to Q.11)<br>b) No ☐(Go toQ.11.a) |
| 11. | **(OPTIONAL)** If **YES**, approximate cost of the ramp in Rs. Lakhs: | |

Verified RedEstate ™

| | | |
|---|---|---|
| 11.a | **(OPTIONAL)** If **NO,** describe the infrastructure required for emptying. | |

| | | | |
|---|---|---|---|
| 12. | Existing Infrastructure for Pre-treatment | | |
| | **A. Type** | **B. Availability** | **C. If Yes in 'B', current working condition** |
| | i. Coarse screen | Yes ☐<br>No ☐ | Working☐<br>Needs major refurbishment☐ |
| | ii. Fine screen | Yes ☐<br>No ☐ | Working☐<br>Needs major refurbishment☐ |
| | iii. Grit removal | Yes ☐<br>No ☐ | Working☐<br>Needs major refurbishment☐ |
| | iv. Screening disposal arrangements | Yes ☐<br>No ☐ | Working☐<br>Needs major refurbishment☐ |
| | v. Others (Specify)<br>---------- | Yes ☐<br>No ☐ | Working☐<br>Needs major refurbishment☐ |

| | | |
|---|---|---|
| 13. | What is the total built area available at the STP? (in $m^2$) | ☐☐ |
| 14. | What is the total unbuilt area available at the STP?(in $m^2$) | i. Area covered by trees☐☐<br>ii. Area covered by shrubs, grass☐☐<br>iii. Parking space ☐☐<br>iv. Others (Specify)☐☐<br>---------- |
| 15. | What is the size of the discharge mains from the STP? | ☐☐ |
| 16. | Is there existing room/space for operators? (TICK IN THE BOX GIVEN AGAINST THE OPTIONS) | a) Yes☐<br>b) No☐ |
| 17. | Is there access to water supply at the STP? (TICK IN THE BOX GIVEN AGAINST THE OPTIONS) | a) Yes☐<br>b) No☐ |
| 18. | Is there access to toilet and washroom facilities at the STP? (TICK IN THE BOX GIVEN AGAINST THE OPTIONS) | a) Yes☐<br>b) No☐ |
| 19. | Feasibility for construction of additional infrastructure for STP | |
| | Is there space to construct an underground storage tank to receive faecal sludge? (TICK IN THE BOX GIVEN AGAINST THE OPTIONS) | a) Yes☐<br>b) No☐ |
| | If an operator room does not exist, Is there space to construct one? (TICK IN THE BOX GIVEN AGAINST THE OPTIONS) | a) Yes☐<br>b) No☐ |

**VII. FACILITIES AT PUMPING STATION**

| No. | Name of Pumping Station | GPS Location | Surrounding Land use (Residential, commercial, religious etc.) | Distance to Nearest Habitation | Availability of screen | Availability of grit removal mechanism | Wet well |
|---|---|---|---|---|---|---|---|
| 1 | | | | | | | |
| 2 | | | | | | | |
| 3 | | | | | | | |

Venture & RealEstate ™

| | | | | | | | |
|---|---|---|---|---|---|---|---|
| 4 | | | | | | | |
| 5 | | | | | | | |
| 6 | | | | | | | |

Attach/ draw layout for each Pumping Station.

| **VIII. STAFF AT STP** | | | |
|---|---|---|---|
| 1. | Are there dedicated staffs for receiving faecal sludge at the STP? (TICK IN THE BOX GIVEN AGAINST THE OPTIONS) | a) Yes<br>b) No | ☐(Continue)<br>☐(Go to Q.1b) |
| 1a. | If **YES**, give details of their designation and role | | |
| | **Designation** | **Role** | |
| a. | | | |
| b. | | | |
| c. | | | |
| 1b. | If **NO**, from the existing staff who additionally handles the faecal sludge that is received at the STP? MENTION THE DESIGNATION AND THEIR ROLE | | |
| | **Designation** | **Role** | |
| a. | | | |
| b. | | | |
| c. | | | |

Signature of the Assessor:

_____

## 2. Checklist for Assessment of Pump Houses for Co-treatment of Faecal Sludge

| **I. CITY DETAILS** | | |
|---|---|---|
| 1. | Name of Corporation/Municipality | |
| 2. | District Name | |
| 3. | Name of Assessor | |
| 4. | Designation of Assessor | |
| 5. | Name of Authorizing Officer | |
| 6. | Designation and Contact information of Authorizing Officer | |
| 7. | Mobile No. | |
| 8. | Email id | |
| 9. | Office address | |

Verified RealEstate ™

| | | |
|---|---|---|
| 10. | Date of Assessment | □□□□□□□□<br>Date Month Year |
| **II. LOCATION AND ACCESS DETAILS** | | |
| 1 | Name of the pumping station | |
| 2 | Type of pumping station<br>(TICK IN THE BOX GIVEN AGAINST THE OPTIONS) | a) Main pumping station□<br>b) Sub-pumping station□<br>c) Lift Station□<br>d) Others (Specify)<br>----------□ |
| 3 | Pumping station capacity | |
| 4 | Geo-coordinates of the SPS | a) Lat :<br>b) Long : |
| 5 | What are different types of influent mains/sewage lines discharging into the SPS? | |
| 6 | Distance of the SPS from the STP? (in km) | □□ |
| 7 | Length of the sewer mains from the SPS to the STP? (in km) | □□□ |
| 8 | What areas within the city are served by the SPS? | |
| 9 | What type of neighborhood is the SPS located in? (TICK IN THE BOX GIVEN AGAINST THE OPTIONS) | a) Largely residential□<br>b) Densely populated□<br>c) Near market area□<br>d) Outskirt/periphery areas□<br>e) Others (Specify)<br>---------- □ |
| 10 | What is the distance to the nearest residence from the SPS? (TICK IN THE BOX GIVEN AGAINST THE OPTIONS) | a) < 100 m□<br>b) 100 – 300 m□<br>c) 300 – 500 m□<br>d) >500 m□ |
| 11 | Does the access road pass through areas of habitation? (TICK IN THE BOX GIVEN AGAINST THE OPTIONS) | a) Yes□(Continue)<br>b) No□(Go toQ.13) |

Verified RealEstate ™

| | | |
|---|---|---|
| 12 | Will there be challenges in passage of vehicle through residential areas / markets etc.? (TICK IN THE BOX GIVEN AGAINST THE OPTIONS) | a) Yes☐<br>b) No☐ |

| | | | |
|---|---|---|---|
| 13 | Type of external access- roads to the pumping station (TICK IN THE BOX GIVEN AGAINST THE OPTIONS) | | |
| | **a) Type** | **b) Width** | **c) Condition** |
| | i. Single lane☐<br>ii. Two lane-undivided☐<br>iii. Two lane-divided☐<br>iv. Multi-lane☐<br>v. Others ☐<br>(Specify)<br>---------- | i. <3 m☐<br>ii. 3-4.5m☐<br>iii. 4-7m☐<br>iv. >7m☐ | i. Paved and in good condition☐<br>ii. Paved but road condition requires improvement (eroded / potholes)☐<br>iii. Unpaved road☐<br>iv. Others (Specify)☐<br>---------- |

| | | |
|---|---|---|
| **III. AVAILABILITY OF SPACE AND EXISTING INFRASTRUCTURE** | | |
| 1. | Does the SPS currently receive faecal sludge? | a) Yes☐<br>b) No☐ |
| 2. | If **YES**, since when (Year) has the SPS been receiving faecal sludge? | ☐☐☐☐ |
| 3. | On an average, how many trucks empty faecal sludge in a day at the SPS? | ☐☐ |
| 4. | What is the average capacity of the trucks that empty faecal sludge at the SPS? (in liters) | ☐☐☐☐☐ |
| 5 | Average volume of faecal sludge received in a week (in MLD) | ☐☐ |
| 6 | What are challenges faced by the SPS in receiving faecal sludge? For example, poor external and internal access, odour, lack of human resource, etc. | |
| 7. | Is the internal access road to pumping station wide enough for the septage truck (3.5 m width, 9 m length, dimensions to be confirmed) movement? (TICK IN THE BOX GIVEN AGAINST THE OPTIONS) | a) Yes☐<br>b) No☐ |
| 8. | Is there enough space within the pumping station premises for a septage truck (3.5 m width, 9 m length, dimensions to be confirmed) to enter, turn around and exit? (TICK IN THE BOX GIVEN AGAINST THE OPTIONS) | a) Yes☐<br>b) No☐ |
| 9. | Is there a point such as collection well etc. in which the septage trucks can empty septage/ faecal sludge/ sewage from ground level(TICK IN THE BOX GIVEN AGAINST THE OPTIONS) | a) Yes☐(Go toQ.11)<br>b) No☐(Continue) |

Verified RedlEstate ™

| | | |
|---|---|---|
| 10. | If the response '**NO'** to above question, can a simple ramp be constructed for the trucks to empty? (TICK IN THE BOX GIVEN AGAINST THE OPTIONS) | a) Yes☐(Go to Q.12)<br>b) No☐ (Continue) |
| 11. | **(OPTIONAL)** If **YES**, approximate cost of the ramp in Rs. Lakhs: | |
| 12. | Existing Infrastructure for Pre-treatment | |
| | **A. Type** | **B. Availability** |
| | i. Coarse screen | Yes ☐<br>No ☐ |
| | ii. Fine screen | Yes ☐<br>No ☐ |
| | iii. Grit removal | Yes ☐<br>No ☐ |
| | iv. Screening disposal arrangements | Yes ☐<br>No ☐ |
| | v. Others (Specify)<br>---------- | Yes ☐<br>No ☐ |
| 13. | What is the total area of the SPS? (in $m^2$) | ☐☐ |
| 14. | What is the total built area available at the SPS? (in $m^2$) | ☐☐ |
| 15. | What is the total unbuilt area available at the SPS? (in $m^2$) | i. Area covered by trees☐☐<br>ii. Area covered by shrubs, grass☐☐<br>iii. Parking space ☐☐<br>iv. Others (Specify)☐☐---------- |
| 16. | Attach plan of the pumping station. If plan is not available, hand sketch the layout approximately to scale (Layout of the site should include: Boundary, dimension of existing structure, open space, width of entry/exit points, roads, operator room)<br>**Refer plan provided in Annexure 2** | |
| 17. | What is the size of the discharge mains from the SPS? | ☐☐ |
| 18. | Number of pumps at the SPS? | ☐☐ |
| 19. | Is there existing room/space for operators? (TICK IN THE BOX GIVEN AGAINST THE OPTIONS) | a) Yes☐<br>b) No☐ |
| 20. | Is there access to water supply at the pumping station? (TICK IN THE BOX GIVEN AGAINST THE OPTIONS) | a) Yes☐<br>b) No☐ |

Verified RedEstate™

| | | |
|---|---|---|
| 21. | Is there access to toilet and washroom facilities at the pumping station? (TICK IN THE BOX GIVEN AGAINST THE OPTIONS) | a) Yes☐<br>b) No☐ |
| 22. | Feasibility for construction of additional infrastructure for pumping station | |
| | Is there space to construct an underground storage tank to receive faecal sludge? (TICK IN THE BOX GIVEN AGAINST THE OPTIONS) | a) Yes☐<br>b) No☐ |
| | If an operator room does not exist, Is there space to construct one? (TICK IN THE BOX GIVEN AGAINST THE OPTIONS) | a) Yes☐<br>b) No☐ |
| **IV. PUMPS** | | |
| 1. | What type of pumps and pumping configuration are used at the pumping station? | |
| | **A. Type (TICK IN THE BOX GIVEN AGAINST THE OPTIONS)** | **B. No.** |
| | Horizontal Pumps in dry pit☐ | |
| | Vertical pumps in dry pit☐ | |
| | Vertical pumps in wet pit☐ | |
| | Submersible sewage pumps in wet pit☐ | |
| 2. | Flow meter present (TICK IN THE BOX GIVEN AGAINST THE OPTIONS) | a) Yes☐(GOTOSECTION VI)<br>b) No☐(Continue) |
| 3. | If yes, Flow Meter working (TICK IN THE BOX GIVEN AGAINST THE OPTIONS) | a) Yes☐<br>b) No☐ |
| **V. STAFF** | | |
| 1. | Staff working at the pumping station | |
| | **Designation** | **Role** |
| a. | | |
| b. | | |
| 2. | Will there be concern of complaints from neighborhood because of odor, movement of septage trucks etc. if the pumping station is converted to decanting station? (TICK IN THE BOX GIVEN AGAINST THE OPTIONS) | a) Yes☐(Continue)<br>b) No☐ |
| 2a. | If **YES**, give details | |

Signature of the Assessor:

_____

Verified RedEstate ™

## ANNEXURE 9: ESTIMATION OF FAECAL SLUDGE GENERATED- SUMMARY OF METHODS AND ASSUMPTIONS

Accurate estimation of faecal sludge generation is necessary for the correct sizing of FSTPs. There are various theoretical models available, but these might not prove to be accurate in real life planning exercises primarily because:

a. containment sizes are varied,

b. there is variation in de-sludging practices.

In addition, the proposed de-sludging models have an impact on FSTP sizing. Given this, it is recommended that modular FSTPs are built, with land secured for future expansion. If not possible, a conservative estimate is recommended so as to not over-size the FSTP.

Faecal sludge generation estimation methods widely used/ quoted in literature are:

1. Population and per capita sludge generation rates or accumulation rates such as US - EPA norms or Bureau of Indian Standards
2. De-sludging operators reported data
3. Survey based on observed or reported (HH dependent) data
4. On-site system size and desludging rate

Brief description of methods and assumptions provided below.

1. **Assumed FS accumulation rates:** Faecal sludge generated is estimated using population data from Census and per capita sludge accumulation rates reported in literature.

*Typical assumptions*:

a. Sludge accumulation rate – 230 liters per capita per year[7]
b. Growth rate of households – based on the decadal population growth in districts as in
Census 2011
c. No. of days in a year – 300 days
d. Frequency of cleaning – 3 years

2. **Desludging volumes reported by operators:** Operators serving an urban location are identified, the reported values on truck sizes and maximum number loads per month is used to estimate faecal sludge generated per day.

*Typical assumptions:* size of the tanker is 5000 L (vary between 4000 and 8000), full load tanker, 30 working days a month.

[7] U.S. EPA. Handbook: Septage Treatment and Disposal. EPA/625/6-84/009 (NTIS PB88184015), 1984.
b. Advisory Note: Septage Management in Urban India – MOUD 2013
c. Suresh Kumar Rohilla, Bhitush Luthra, Amrita Bhatnagar, Mahreen Matto and Uday Bhonde 2017, Septage Management: A Practitioner's Guide, Centre for Science and Environment, New Delhi

3. **Survey based on observed or reported (HH dependent) data:** This involves sample survey or census of individual household and collection data on size of on-site systems, frequency of desludging.
4. **Standard size assumption:** On-site systems sizes are assumed to be between 2-3 m3 and desludging rates once in 2-3 years.

**Suggested Approach:**

Results from different approaches for same cities from Tamil Nadu is provided in the Table below:

| No | Sludge generation estimation methods | City A KLD (coastal) | City B KLD (plain | City C KLD (hilly) |
|---|---|---|---|---|
| 1 | EPA norms (0.230 $m^3$ of sludge per capita per year) | 45 | 40 | 27 |
| 2 | Survey based | 56 | - | 16 |
| 3 | Operator reported data | - | - | - |
| 4 | Standard size assumption based | 55 | 49 | 35 |

The Table indicates that there is not much variation between the estimates for cities A and B, whereas C there is significant variation. A combination of above methods is typically useful for estimation and cross-verification. For the purposes of planning and decision-making Method 1 is suggested.

Normally the estimates are used for sizing FSTP capacities. For this purpose, especially when cities are opting for different models for desludging, a **modular approach** is suggested. Incremental addition of capacity can be implemented based on operational data. This approach also has the operational advantage to manage the season fluctuation.

Verified RealEstate ™

## ANNEXURE 10: CHECKLIST FOR ASSESSMENT OF FSTPs

This checklist is developed for the ULBs to assess the potential of sites for setting up FSTP.

| I. ULB DETAILS | | |
|---|---|---|
| 1. | Name of Corporation/Municipality/ TP | |
| 2. | District Name | |
| 3. | Name of Assessor | |
| 4. | Designation of Assessor | |
| 5. | Name of Authorizing Officer | |
| 6. | Designation and Contact information of Authorizing Officer | |
| 7. | Mobile No. | |
| 8. | Email id | |
| 9. | Office address | |
| 10. | Date of Assessment | □□ □□ □□□□<br>DD MM YYYY |

| II. SITE LOCATION | | |
|---|---|---|
| 1. | Site address | |
| 2. | Geo-coordinates (in degree decimals) | a) Lat : □□□□□□□□<br>b) Long : □□□□□□□□<br>Example: 79.123456 and 11.123456 |
| 3. | Elevation (above Mean Sea Level (MSL) in m) | □□□□ |
| 4. | Distance to the nearest existing residential area (in m) | □□□□ |
| 5. | Distance to the nearest proposed residential area (in m) | □□□□ |
| 6. | Type of approach road to the FSTP site (TICK IN THE BOX GIVEN AGAINST THE OPTIONS) | |
| | **a) Width** | **b) Type** |
| | i. <3 m □<br>ii. 3-4.5m □ | i. Single lane □<br>ii. Two lane-undivided □<br>iii. Two lane-divided □ |

Verified RealEstate ™

| II. SITE LOCATION | | |
|---|---|---|
| | iii. 4-7m ☐<br>iv. >7m ☐ | iv. Multi-lane ☐<br>v. Others (Specify) ☐<br>_____ |
| 7 | Distance to the nearest waterbody such as river, lake, irrigation canal, storm water drain (in m) | ☐☐☐ |
| 8 | Distance to the nearest electricity Distribution Transformer Centre (DTC) (in m) | ☐☐☐ |
| 9 | Is there a water supply source available on-site? | a) Yes ☐ (Continue)<br>b) No ☐ (Go to Section III) |
| 10 | If yes, mention source type. | i. Piped supply ☐<br>ii. In-situ borewell ☐<br>iii. Water tanker ☐<br>iv. Others (Specify) ☐<br>_____ |

| III. SITE DETAILS | | | |
|---|---|---|---|
| 1 | Total area of the site (in acres) | ☐☐☐ | |
| 2 | Provide land area used for different purposes and vacant area | | |
| | a. Purpose | b. Is it used?<br>*Tick in the box given* | c. If yes, provide area ($m^2$) |
| i. | Solid waste processing plant | Yes ☐ No ☐ | ☐☐☐ |
| ii. | Road | Yes ☐ No ☐ | ☐☐☐ |
| iii. | Office, operators room, etc | Yes ☐ No ☐ | ☐☐☐ |
| iv. | Green cover (Mention type: trees, shrubs, lawn, etc.)<br>_____ | Yes ☐ No ☐ | ☐☐☐ |
| v. | Storm water drain | Yes ☐ No ☐ | ☐☐☐ |
| vi. | Others 1 (Please specify)<br>_____ | Yes ☐ No ☐ | ☐☐☐ |
| vii. | Others 2 (Please specify)<br>_____ | Yes ☐ No ☐ | ☐☐☐ |
| viii. | Vacant area | Yes ☐ No ☐ | ☐☐☐ |

Verified RealEstate ™

| **III. SITE DETAILS** | | | |
|---|---|---|---|
| 3 | What is the total area that can be allocated for FSTP construction? (in acres) | ☐☐☐ | |
| 4 | Does the allocated area require land preparation and development? | a. Yes ☐ (Continue)<br>b. No preparation (vacant and ready to use) ☐ (Go to Q.6) | |
| 5 | Of the allocated area, how much requires land preparation and development? | | |
| | a. Type of preparation work | b. Requires land preparation and development?<br>*Tick in the box given* | c. If yes, provide area ($m^2$) |
| i. | Low lying area which requires back-filling | Yes ☐ No ☐ | ☐☐☐ |
| ii. | Demolition of existing structures | Yes ☐ No ☐ | ☐☐☐ |
| iii. | Any other – Please mention<br>_____ | Yes ☐ No ☐ | ☐☐☐ |
| 6 | Site gradient or slope (%) | i. 0-5 ☐<br>ii. 5-10 ☐<br>iii. 10-15 ☐<br>iv. >15 ☐ | |
| 7 | Mention the soil type. | i. Gravel ☐<br>ii. Sand ☐<br>iii. Silt ☐<br>iv. Clay ☐ | |
| 8 | What is the soil depth (in m)? | ☐☐☐ | |
| 9 | What is the post monsoon depth to water table; Check with the nearest well (in m)? | i. 1 ☐<br>ii. 1-3 ☐<br>iii. >3 ☐ | |
| 10 | Is the area flood prone? | a) Yes ☐ (Continue)<br>b) No ☐ (Go to Q.13) | |
| 11 | If yes, when was the last time of major flooding?<br>MENTION THE YEAR | ☐☐☐☐ | |
| 12 | What is the frequency of flood? | i. Once in a year ☐<br>ii. Once in 5 years ☐<br>iii. Once in 10 years ☐<br>iii. Others (Please mention) ☐<br>_____ | |
| 13 | What is the length of the boundary wall around the property (in m)? | ☐☐☐ | |

Verified RealEstate ™

| IV. SOLID WASTE MANAGEMENT PLANT DETAILS (APPLICABLE ONLY FOR SITES WITH SWM PLANT, REST GO TO SECTION VI) | | |
|---|---|---|
| 1 | What is the capacity of the SWM plant (in MTPD)? | ☐☐☐☐☐ |
| 2 | What is the quantity of solid waste processed at the site (in tonnes)? | ☐☐☐☐☐ |
| 3. | What is the method of processing of organic waste? | i. Vermi-composting ☐<br>ii. Anaerobic digestion ☐<br>iii. Others (Please specify) ☐<br>_____ |
| 4 | Is there a Consent to Establish (CTE) and Consent to Operate (CTO) from the Tamil Nadu Pollution Control Board (TNPCB)? | a) Yes ☐ (Continue)<br>b) No ☐ (Go to Section VI) |
| 5. | If yes, attach copy of the Consent orders. | |

| V. LAND OWNERSHIP AND LAND USE CLASSIFICATION | | |
|---|---|---|
| 1 | Is the land owned by the ULB? | a) Yes ☐ (Go. To Q.3)<br>b) No ☐ (Continue) |
| 2 | If no, who is the present owner? | |
| 3 | Survey number of the site | ☐☐☐☐☐☐☐☐☐ |
| 4 | What is the present land use classification as per the Local Planning Authority?<br>ATTACH SUPPORTING DOCUMENT FOR OWNERSHIP AND LAND USE | |
| 5 | Is there any pending dispute on the land parcel? | a) Yes ☐ (Continue)<br>b) No ☐ (Go to Section VI) |
| 6 | If yes, what is the status of dispute? | |

Verified RealEstate ™

**SECTION VI: ADDITIONAL DETAILS:**

Please attach the following documents:

1. Site schematic (Hand sketch) covering:

    a. A detailed sketch of the site with details in section III of the check list marked

    b. Boundary of the site with physical dimensions, approach road, location and approximate areas of the infrastructure (SWM centres, storage shed, internal road, well, tank, etc.), adjacent sites and its land use.

2. Conduct Soil Safe Bearing Capacity (SBC) test and attached the report

3. Documents supporting land ownership details and land use classification

4. Consent orders from TNPCB

5. Site photograph

Verified RealEstate

## ANNEXURE 11: PROTOCOL FOR O&M

**Operation and Maintenance (O&M)**

Once FSTPs are commissioned, efficient functioning of the plant depends heavily on the O&M protocols followed by the treatment plant operator and maintenance staff. Local Bodies should ensure:

1. Orientation and training for ULB officer and FSTP contractor are organized on proper FSTP O&M procedures.
2. FS screening should be carried out as mentioned in Chapter 2.5.6.
3. The facility should be operational during working hour and a responsible person should be appointed in the facility to ensure that no industrial waste is unloaded at the FSTP.
4. Screening Chamber:
    a. After every discharge of faecal sludge by the trucks, the screening chamber shall be cleaned.
    b. During the entire operation mentioned above, the operator should wear protective equipment such as gloves, masks and make sure no skin -contact with the faecal sludge.
    c. The sludge will flow from the screening chamber to the stabilization reactor by gravity.
5. Stabilization Reactor (SR):
    a. The main task in SR is regular emptying of the third chamber of the SR and discharge of sludge into the respective sludge drying/dewatering beds.
    b. Discharge of sludge from 3rd chamber of SR into the respective drying beds is carried out using the submersible pump with the valve arrangement and flexible hose pipe.
    c. The operator should wear appropriate protective equipment and assure a secure installation of the piping to avoid spillage and contamination of surroundings.
6. Sludge Drying Bed (SDB):
    a. In the sludge drying bed, the sludge is dried for 12 days. While the sludge is drying, the percolate flows into the liquid treatment facility.
    b. The dried sludge must be removed manually after 12 days and placed at the foreseen area. This is important to ensure the daily discharge of sludge from the SR into the sludge drying beds.

Verified RedEstate

c. The operator should wear respiratory protection and gloves additionally to usual protective clothing.

7. Integrated Settler (IS):
   a. In the IS, the solids moved from the SDB with the percolate will settle and be digested. This module does not require any external operation as the flow works by gravity. The settled solids must be removed once a year.
8. Anaerobic Filter:
   a. This module does not require any external operation as the flow works by gravity. The settled solids must be removed once a year and the filter material should be cleaned once in 3 to 5 years or whenever found clogged.
9. Horizontal Planted Gravel Filter:
   a. This module does not require any external operation as the flow works by gravity.
   b. Dead leaves, debris and other junk fallen on the surface of HPGF must be removed periodically and the filter material should be cleaned once in 6 years or whenever found clogged.
10. Polishing Pond:
    a. This module needs to be emptied regularly, at least once in 3 months.
    b. The sludge settled at the bottom to be desludged during emptying of the pond.
    c. Regular harvesting of algae or other water plants to be carried out if found in excess.
11. Collection Tank: The treated wastewater from the Polishing Pond passes to the collection tank by overflow which is to be reused.

**Safety Measures**

This section gives a brief detail about the basic Do's and Don'ts in relation to the safety measures which needs to be taken while performing the O&M related activities. Local bodies should ensure the following Dos and Don'ts are shared with personnel responsible for the O&M of the FSTP:

i. General Site Safety
   - Do be careful and observant at all times
   - Do ensure inspection manholes are suitably covered or supervised when no operation and maintenance activity is being performed.
   - Don't leave open chambers unattended

ii. Personal Safety Precautions

Verified PedEstate ™

- Do wash your hands and disinfect them after completion of tasks.
- Do use proper clothing (long sleeved shirt, long trousers, shoes and gloves, apron, mask) while carrying out maintenance tasks.
- Do keep a first aid kit, lime or concentration of chlorine solution, hand wash and hand sanitizer, spare gloves and masks should always be kept in the treatment plant
- Do avoid coming in contact with the wastewater and properly protect wounds from getting in contact with sludge or wastewater.
- Do ensure cleanliness of protective gear like clothes, gloves and boots at all times. Disinfect the PPE after daily use.
- Do keep yourself hydrated when working inside the sludge drying bed.
- Don't eat or drink while conducting the O&M tasks. Find a clean space away from the system to eat and drink.
- Don't be barefoot or bare handed while handling sludge and performing the O&M activities

iii. Proper Disposal of waste

- Do ensure waste from O&M tasks like scum, solid waste, used gloves, masks and paper towels is collected and stored in a safe & dedicated collection facility. The collected waste should be disposed of in a regular interval at a dedicated disposal facility, at least 10 meters away from water bodies to avoid infiltration into ground/fresh water.
- Do In case there is a spillage while discharging the sludge into the FSTP, the spill has to be cleaned by the operator by sucking up the spill through the vacuum pump into the tank or if that is not possible, then cover it with lime. In case that is also not possible, then the spill should be washed and the wash water should be directed to a covered drain and chlorine should be sprayed on the spill area.
- Don't wait longer than necessary to dispose of garbage.
- Don't dispose of garbage at unofficial dumping locations.
- Don't burn garbage to get rid of it

**Monitoring and Reporting**

Local Bodies should implement adequate monitoring and oversight systems. This should include but not be limited to the following activities:

1. Officers from the ULB shall regularly visit the site and monitor the FSTP operations.

2. FSTP operators shall maintain a record of all incoming loads and the load quality test results. The logbook should record the sludge discharge including load volume, truck number and discharge times.

3. The record book shall be regularly reviewed by relevant & ULB officers to verify the quality of the FS received.

4. The results of the sludge quality shall also be displayed at the treatment facility on a display board.

5. An O&M manual shall be prepared by the ULBs and kept at the FSTP premises at all times for reference and use by the FSTP operators.

6. Data should be collected on actual sludge drying time at different climate conditions to improve operation time and efficiency.

7. Dried sludge samples should be taken on a regular basis and given to a laboratory for complete chemical and biological analysis and to ensure safety of the product when discharged or reused.

8. Sampling of effluent shall be done on a regular basis and given to a laboratory for complete chemical and biological analysis to ensure proper functioning of the FSTP and to ensure that the water quality is acceptable for discharge.

9. Water quality should be periodically monitored every month by collecting water samples from the monitoring wells (upstream and downstream of the treatment plant) falling within the 0.50 km radius and tested to observe the changes in the improvement in ground water quality.

Verified RealEstate™

## ANNEXURE 12 (A): MEMORANDUM OF UNDERSTANDING FOR CO-TREATMENT OF FAECAL SLUDGE ALONG WITH SEWAGE AT STPs

Memorandum of Understanding (hereinafter referred to as the "MoU") made on *[Insert date],* day of *[Insert month]* 2019 at *[Insert place]*

BETWEEN

*[Insert name]* Municipal Corporation/Municipality/Town Panchayats established under the City Municipal Corporation Act, 19… or Tamil Nadu District Municipalities Act, 1920 of the State of Tamil Nadu, acting through *[Name of Commissioner],* the Commissioner (hereinafter referred to as "Host ULB", which expression shall, unless repugnant to the context or meaning thereof, mean and include its successors and assigns)

AND

*[Insert name]* Municipality/Town Panchayat established under the Tamil Nadu District Municipalities Act 1920 of the State of Tamil Nadu, acting through *[Name of Commissioner/Executive Officer]*, the Commissioner/Executive Officer (hereinafter referred to as "Participating ULB 1", which expression shall, unless repugnant to the context or meaning thereof, mean and include its successors and assigns)

AND

*[Insert name]* Municipality/Town Panchayat established under the Tamil Nadu District Municipalities Act 1920 of the State of Tamil Nadu, acting through *[Name of Commissioner/Executive Officer]*, the Commissioner/Executive Officer (hereinafter referred to as "Participating ULB 2", which expression shall, unless repugnant to the context or meaning thereof, mean and include its successors and assigns)

AND

*[…]*

*[Insert name]* Municipality/Town Panchayat established under the Tamil Nadu District Municipalities Act 1920 of the State of Tamil Nadu, acting through *[Name of Commissioner/Executive Officer]*, the Commissioner/Executive Officer (hereinafter referred to as "Participating ULB *[Insert number]*", which expression shall, unless repugnant to the context or meaning thereof, mean and include its successors and assigns)

Participating ULB 1, Participating ULB2 *[…]* and Participating ULB *[Insert number]* are hereinafter referred to as the "Participating ULB(s)" which have the same meaning given to it as provided in Clause 2of this MoU.

The Host ULB and the Participating ULB(s) are hereinafter referred to individually as the "Party" and collectively as the "Parties".

WHEREAS, the Operative Guidelines for Septage Management for Local Bodies in Tamil Nadu, 2014 (the "Operative Guidelines") issued by Municipal Administration & Water Supply Department, Government of Tamil Nadu (hereinafter referred to as "State Govt.") in G.O. (Ms) No. 106, MA&WS Department, Dated 01.09.2014, impose an obligation on each local body to adopt suitable processes for the effective management of Faecal Sludge and Septage generated within its jurisdiction. Pursuant to the said Operative Guidelines, Local Bodies constituted under the Tamil Nadu District Municipalities Act 1920 are responsible for, inter alia, making adequate provisions for the collection/removal and disposal of Faecal Sludge and Septage.

The State Govt. in G.O. (Ms) No. 88, MA&WS Department, Dated 31.08.2018 has developed a cluster-based approach to ensure optimum utilisation of existing and upcoming Sewage Treatment Plants (hereinafter called as the "STPs") and new Faecal Sludge Treatment Plants (herein after called as the "FSTPs") in the State of Tamil Nadu, in furtherance of public interest and with the aim of improving

standards of public health and sanitation in the State. The State Govt. has now decided to authorise and support this MoU to provide a facilitative framework for Co-treatment of Faecal Sludge and Septage at the existing and upcoming STPs so that the Municipal Corporation, Municipalities and Town Panchayats may use the facilities for the scientific treatment and disposal of the Faecal Sludge and Septage generated within their respective jurisdictions.

NOW THIS MoU WITNESSETH AS FOLLOWS: -

1. Purpose / Objectives of MoU

The purpose of this MoU is to enable the parties to maximize utilisation and fund the Co-treatment of Faecal Sludge and Septage at existing and upcoming STPs. The parties currently intend to follow this MoU consistent with the Guidelines prescribed in G.O. (Ms) No. 106, Dated 01.09.2014 and G.O. (Ms) No. 88, Dated 31.08.2018 as well as other related provisions brought in force and effect as of the date hereof.

2. Definitions

In this MoU, unless it is repugnant to the context or inconsistent therewith, the following words, phrases and expressions shall bear the meaning hereinafter respectively assigned to them:

a. **'Account'** shall mean a Bank Account which the Host ULB shall open and maintain with a Bank in which all inflows and outflows of cash on account of capital and revenue receipts and expenditures shall be credited and debited, as the case may be, in accordance with the provisions of this MoU, and includes the sub-Accounts of such Account.
b. **'Agreement'** means the agreement between the Host ULB and the Contractor for STP O&M including its Schedules and Annexures.
c. **'Alternate Arrangement'** means a facility for treating Faecal Sludge and Septage, such as Underground Sewerage System and Sewage Treatment Plant or a standalone FSTP, which meet regulatory standards.
d. **'Authority'** shall mean and include the Municipality/Municipal Corporation/Town Panchayat/ Regional Directorate of Municipal Administration/Additional Directorate of Town Panchayats/Commissionerate of Municipal Administration/Directorate of Town Panchayats or such other department as may be notified/appointed from time to time by the ----- for the purpose of implementation of this MoU.
e. **'Bio-medical Waste'** shall have the meaning as defined under the Biomedical Wastes (Management and Handling) Rules, 1998 and as amended from time to time.
f. **'Consent to Operate'** means the certificate issued by the Tamil Nadu Pollution Control Board prior to commencement of STP operations.
g. **'Contractor'** shall mean the person or persons, as the case may be, with whom the Host ULB has entered into the operation and maintenance (O&M) contract, or any other agreement or a material contract for construction, operation and/or maintenance of the STP or matters incidental thereto.
h. **'Construction and Demolition Waste;** means solid waste resulting from construction, remodelling, repair, renovation or demolition of structures or from land clearing activities or trenching or de-silting activities.
i. **'Co-treatment'** means treating faecal sludge and septage along with sewage at a Sewage Treatment Plant.
j. **'Changes in Law'** means the occurrence of any of the following after the Operation Start Date:
    - the enactment of any new Indian law or Tamil Nadu State law;
    - the repeal, modification or re-enactment of any existing Indian law or Tamil Nadu State law;
    - the commencement of any Indian law or Tamil Nadu State law which has not been given effect until the date of the MoU; and
    - a change in the interpretation or application of any Indian law or Tamil Nadu State law by a judgement of a court of record which has become final, conclusive and binding, as compared to such interpretation or application by a court of record prior to the date of the MoU.

Verified RealEstate™

k. **'Dead Remains'** means the dead bodies, carcasses, bones or skeletal remains of animals, rodents and other living beings (other than plants).
l. **'Decantation Fee'** shall mean the amount payable by Desludging Operators to the Host ULB upon each visit to the STP Site for the disposal of Faecal Sludge and Septage.
m. **'Decanting Facility'** means a Sewage Pumping Station that receives Faecal Sludge and Septage and pumps it to another a Sewage Pumping Station or a Sewage Treatment Plant.
n. **'Desludging Operator'** shall mean any person or firm or self-help group or society or private company granted the licence to collect, transport and dispose faecal sludge and septage.
o. **'Desludging Vehicle'** means the vacuum trucks or such other vehicles equipped with motorised pumps and storage tanks owned by the ULB or Desludging Operator, of such design specification as may be approved from time to time by the ULB, for emptying and transporting faecal sludge and septage.
p. **'Effective Date'** shall mean the date on which this MoU comes into force and effect pursuant to commissioning of the STP.
q. **'E-waste'** means discarded electrical or electronic devices.
r. **'Excluded Waste'** means waste material of the nature that the STP is not designed or authorised to receive, manage, process and dispose, which includes (i) Hazardous Waste (ii) Bio-medical Waste (iii) Dead Remains (iv) E-Waste and (v) Construction and Demolition Waste.
s. **'Faecal Sludge'** means raw or partially digested, in a slurry or semi solid form, the collection, storage or treatment of combinations of excreta and black water, with or without grey water. It is the solid or settled contents of pit latrines and septic tanks.
t. **'Force Majeure Event'** means any event which prevents or delays the performance of the obligations under this MoU in whole or in part by either Party by reason of public agitation, civil disturbance, riots, war, hostilities, acts of public enemies, civil commotion, sabotage, fire, flood, earthquake, epidemics, explosion, strikes, lock-outs, acts of God, acts on orders of Government/authorities, rules and regulations or delay/abandonment due to order of the Court and/or any other cause beyond the reasonable control of the Party affected.
u. **'Good Industry Practice'** means the practices, methods, techniques, designs, standards, skills, diligence, efficiency, reliability and prudence which are generally and reasonably expected from a contractor and/or Party in the performance of its obligations.
v. **'Hazardous Waste'** – shall have the meaning as defined under the Hazardous Wastes (Management and Handling) Rules, 1989.
w. **'Host ULB'** shall mean the ULB that owns and is responsible for the operation and maintenance of the STP.
x. **'Licence Fee'** shall mean the amount payable by Desludging Operators annually to obtain a licence to operate within an ULB Cluster.
y. **'Operative Guidelines'** means the Guidelines referred to in the Recitals.
z. **'Operations Start Date'** shall mean the date notified by the Host ULB as the date on which the STP is ready to commence co-treatment of faecal sludge and septage.
aa. **'Operations and Maintenance (O&M)'** means the operation and maintenance of the STP and includes all matters connected with or incidental to such operation and maintenance and provision of services and facilities in accordance with the provisions of this MoU.
bb. **'Operations and Maintenance Manual (O&M Manual)'** shall mean standard operating procedures for regular, preventive, long term operations and maintenance covering safety requirements, material and equipment replacement and emergency activities at the STP.
cc. **'Participating ULB(s)'** shall mean Municipal Corporation/Municipality/Town Panchayat specified in the Recitals which are party to this MoU and includes any other Municipal Corporation/Municipality/Town Panchayat which may at a later date become party to this MoU.
dd. **'Scheduled Bank'** means those banks which have been included in the Second Schedule of Reserve Bank of India Act, 1934. RBI in turn includes only those banks in that Schedule which satisfy the criteria laid down under section 42(6) (a) of the said Act.

Verified RealEstate

ee. **'Septage'** means the liquid and solid material that is pumped from a septic tank, cesspool, or such on site treatment facility after it has accumulated over a period of time.

ff. **'Sewage'** means the waste water containing human excreta either dissolved or undissolved, discharged from toilets and other receptacles intended to receive or retain such human excreta.

gg. **'Sewage Treatment Plant (STP)'** means a treatment plant of the design specifications and guidelines issued by the concerned authority from time to time, owned by the ULB, capable of the treatment and disposal of sewage.

hh. **'STP Site'** means the site of the STP including the land, buildings, structures, road works, trees and any other immovable property on, or attached to, the Site.

ii. **'Testing and Screening Protocol'** shall mean testing the faecal sludge and septage for pH and electrical conductivity and screening for waste such as industrial waste that may adversely affect the STP operations.

jj. **'Testing Period'** shall mean a period within which any performance tests and trial runs shall be conducted at the STP so as to ensure that the STP is fit and ready to operate commercially.

kk. **'Treated Products'** shall mean effluent and stabilized bio solids generated by the treatment of Faecal Sludge and Septage that meet the regulatory standards.

ll. **'Test Results'** shall mean measurements from the testing carried out for assessing the STP performance and the quality of the Treated Products.

mm. **'Urban Local Body (ULB)'** means the Municipal Corporation/Municipality/Town Panchayat located within the State of Tamil Nadu.

nn. **'ULB Cluster'** shall mean the Municipal Corporations, Municipalities and Town Panchayats which together use a Sewage Treatment Plant defined in G.O. (Ms) No. 106, MA&WS Department, dated 01.09.2014 and G.O.(Ms)No.88, MA&WS Department, dated 31.08.2018 and as may be notified from time to time.

3. Interpretations

a. The words, phrases and expressions defined hereinabove in Clause 2 or defined elsewhere by description in this MoU, together with their respective grammatical variations and cognate expressions shall carry the respective meanings assigned to them in the said Clause 2 or in this MoU and shall be interpreted accordingly;

b. all words in singular shall be deemed to connote their respective plurals and vice-versa, unless the context suggests otherwise;

c. the words "include" and "including" are to be construed without limitation;

d. the headings of the Clauses in this MoU are merely for the purpose of convenience and shall have no bearing on the interpretation of this MoU;

e. the Annexures to this MoU form an integral part of this MoU and shall be interpreted accordingly.

4. Measurements

. All measurements and calculations shall be in the metric system and the calculations shall be done up to 2 (two) decimal places, with the third digit of 5 (five) or above being rounded up and below 5 (five) being rounded down.

5. Obligations of Host ULB Prior to Operations Start Date

The Host ULB shall grant a suitable Contractor the rights and obligations required to enable it to duly undertake the O&M of the STP.

a. The Host ULB shall open and establish an Account with a Scheduled Bank in accordance with the terms and conditions of this MoU (hereinafter referred to as the "Account"). The Account shall be for the purposes of Co-treatment at the STP. The Account shall be operated by the Host ULB.

b. The Host ULB shall not be responsible in any manner for the treatment of faecal sludge and septage generated within the jurisdiction of the Participating ULB(s) before the Operations Start Date.

c. The Host ULB shall notify the Participating ULB(s) of the Operations Start Date subject to receipt of the Consent to Operate by advance notice in writing.

d. The Host ULB shall inform the Participating ULB(s) of the duration of the Testing Period.

Verified RedEstate ™

e. At any time during the Testing Period, if any material defects, imperfections, shortcomings or such other faults are identified, the Host ULB shall notify Participating ULB(s) of the same and any consequent change in the Operations Start Date.
f. In the event that there is a delay in the occurrence of the Operations Start Date due to (i) any act or omission on the part of the Contractor and (ii) Force Majeure Event, the Host ULB may (i) terminate this MoU in accordance with Clause 15; or (ii) extend the Operations Start Date for a period as it deems fit.
g. The Host ULB shall notify Desludging Operators operating within the ULB Cluster of the operational hours of the STP, the disposal process, Decantation Fee and excluded delivery routes during specified hours.
h. The Host ULB shall inform the Participating ULB(s) prior to implementation of any proposed modification or change in the operational hours of the STP and the disposal process.
i. The Host ULB shall, in consultation with the Participating ULB(s), involve Non-Governmental Organisations (NGOs), Government Organisations, representatives of ULBs, District Collector and other relevant organisations or officers, conduct trainings and create awareness regarding the Co-treatment at STP.

6. Obligations of Participating ULB(s) Prior to Operations Start Date

The Participating ULB(s) agrees and acknowledges that prior to the Operations Start Date, the Participating ULB(s) shall be responsible for the treatment of faecal sludge and septage generated in its jurisdiction as per the Operative Guidelines.

a. Participating ULB(s) shall notify Desludging Operators operating within its jurisdiction of the operational hours of the STP, the disposal process, Decantation Fee and excluded delivery routes during specified hours.
b. The Participating ULB(s) shall support the Host ULB in conducting training and creating awareness regarding the Co-treatment at STP.

7. Obligations of Host ULB from Operations Start Date

The Host ULB shall be responsible for the O&M of the STP.

a. The Host ULB shall convene a meeting with all Participating ULB(s) every 90 days on matters specified under this MoU and shall share with all Participating ULB(s) the minutes of the meeting.
b. The Host ULB shall record details of faecal sludge and septage received or rejected (hereinafter referred to as the “Record”).
c. The Host ULB shall share with Participating ULB(s) the Record on a monthly basis from the Operations Start Date.
d. The Host ULB reserves the right to disallow Desludging Vehicles from disposing faecal sludge and septage at the STP should the faecal sludge and septage be deemed as Excluded Waste by the Testing and Screening Protocol.
e. The Host ULB reserves the right to refuse entry to Desludging Operator(s) without a valid desludging licence and/or on non-payment of Decantation Fee.
f. The Host ULB shall ensure that revenue receipts, such as Licence Fee and Decantation Fee, is credited to the Account.
g. The Host ULB shall ensure Test Results for Treated Products and STP performance are recorded and maintained at the STP Site. A summary of the Test Results shall be publicly displayed at the STP Site.
h. The Host ULB shall, in consultation with the Participating ULB(s), involve NGOs, Government Organisations, representatives of ULBs, District Collector and other relevant organisations or officers, conduct trainings and create awareness regarding the Co-treatment at STP.

8. Obligations of Participating ULB(s) from Operations Start Date

The Participating ULB(s) shall be responsible for the O&M of the Decanting Facilities located within its jurisdiction.

a. Participating ULB(s) shall ensure Desludging Operator(s) operating within their respective jurisdiction shall have a valid desludging licence.

Verified © RedEstore™

b. The Participating ULB(s) will support the Host ULB in conducting training and creating awareness regarding the Co-treatment at STP.

9. Dispute Resolution

Under this MoU a Joint Committee hereinafter called the "JC" comprising of the Regional Director of Municipal Administration, the Assistant Director of Town Panchayats and the Regional Executive Engineer shall be constituted.

a. Under this MoU an Appeals Committee hereinafter called the "AC" comprising of the Joint Commissioner of Municipal Administration, the Joint Director (Schemes) of the Directorate of Town Panchayats, the Superintendent Engineer of the Commissionerate of Municipal Administration and Superintendent Engineer of the Directorate of Town Panchayats shall be constituted.
b. In the event of any dispute arising between the Parties in relation to or under this MoU, the same shall be settled by the JC in the first instance and on appeal by the AC. The decision of the AC shall be final and binding.

10. Payment Terms

The Host ULB shall bear all expenses related to Co-treatment, subject to review from time to time.

11. Review and Amendment

a. Provided that if the capacity of the STP permits, any Municipal Corporation/Municipality/Town Panchayat other than the Host ULB and Participating ULB(s) that is desirous to use the STP and the services provided by it, shall sign a Deed of Participation as provided in Annexure B, after obtaining written approval from the Commissionerate of Municipal Administration and Directorate of Town Panchayats to use the STP.
b. The Payment Terms as defined under Clause 10 shall be reviewed by the AC and may be amended after six (6) months and twelve (12) months from the Operations Start Date, if needed.
c. In the event of the Commissionerate of Municipal Administration and Directorate of Town Panchayats approving the participation of any Municipal Corporation/Municipality/Town Panchayat other than the Host ULB and Participating ULB(s) in accordance with Clause 12(a) the Host ULB in consultation with the AC shall review and amend the Payment Terms as defined under Clause 10, payable from such date as decided by the Host ULB at the point of such event.
d. In the event of the exit of the Host ULB and/or one or more of the Participating ULB(s) from the MoU, the AC shall review and amend the Payment Terms as defined under Clause 10, payable from such date as decided by the AC at the point of such event.

12. Term and Renewal

The rights and obligations of the Parties granted under this MoU shall be valid for a Term of three years. The Host ULB and Participating ULB(s) may agree to renew the terms and conditions of this MoU, after the expiry of the Term for such other period as it deems fit and on such terms and condition as may be decided at the point of such renewal.

13. Suspension/Temporary Shut down or Closure of the STP

a. The Host ULB may be allowed to suspend, temporarily shut down or close the STP in case of planned or unplanned repair and maintenance.
b. The Host ULB shall inform Participating ULB(s) of planned repair and maintenance activity in advance of such activity.
c. The Host ULB shall inform Participating ULB(s) of unplanned repair and maintenance activity as soon as practicable and in any case within a reasonable period of time from the commencement of the activity.
d. The Host ULB and Participating ULB(s) shall inform Desludging Operators within their respective jurisdictions of planned maintenance activity at the STP within a reasonable period of time in advance of such activity.
e. During the period of planned or unplanned repair or maintenance activity, the Host ULB and Participating ULB(s) may inform Desludging Operators to avoid desludging during the said

Verified & Registered

period in the first instance and subsequently the next nearest treatment facility, for disposal of Faecal Sludge and Septage.

14. Force Majeure Event

a. As soon as practicable and in any case within a reasonable period of time from the date of occurrence of a Force Majeure Event or the date of knowledge thereof, the affected Party shall notify the other Party or Parties of the same, setting out, inter alia, the following in detail: -

i. the nature, extent and estimated duration of the Force Majeure Event;

ii. the nature of and the extent to which, performance or any of its obligations under this MoU is affected by the Force Majeure Event;

iii. The measures which the affected Party has taken or proposes to take to mitigate the impact of the Force Majeure Event and to resume performances of such of its obligations affected thereby.

b. As soon as practicable and in any case within a reasonable period of time from the receipt of the notification by the affected Party in accordance with the preceding sub-clause (a), the Parties shall meet, hold discussions in good faith to: -

i. assess the impact of the underlying Force Majeure Event;

ii. formulate damage mitigation measures and steps to be undertaken by the Parties for resumption of obligations.

c. If a Force Majeure Event continues or is in the reasonable judgment of the Parties is likely to continue beyond the original estimated duration, the Parties may mutually decide to terminate this MoU or continue this MoU on mutually agreed revised terms. If the Parties are unable to reach an agreement in this regard, the affected Party, shall after the expiry of the said period, be entitled to terminate this MoU in accordance with Clause 15.

15. Termination

a. The Parties hereby agree that the Host and/or Participating ULB(s) cannot terminate its participation in this MoU until it shall submit a written request to that effect to the AC clearly stating: (a) the reasons for seeking an exit from this MoU; (b) the Alternate Arrangement established by it to scientifically dispose the faecal sludge and septage generated within its jurisdiction; and (c) the costs and benefits to the ULB in ceasing its participation in this MoU and the implementation of the Alternate Arrangement.

b. The AC will grant approval for the exit of the Host and/or Participating ULB(s) only if: -

i. the Alternate Arrangement is viable and will enable the Host and/or Participating ULB(s) to dispose faecal sludge and septage in accordance with the applicable Laws;

ii. the Alternate Arrangement is more cost effective for the Host and/or Participating ULB(s); and

iii. the continued viability of the STP is not adversely affected.

16. Notices

a. Unless otherwise stated, notices to be given under this MoU include but are not limited to a notice of waiver of Term, breach of any term of this MoU and termination of this MoU, shall be in writing and shall be given by hand delivery, recognised courier, mailed, delivered or transmitted to the Parties at their respective addresses set forth below:
[*Insert addresses of all Parties*]

b. All notices under this MoU shall be in English and/or Tamil.

17. Counterparts

This MoU may be executed in two counterparts, each of which when executed and delivered shall constitute an original of this MoU but shall together constitute one and only one MoU.

18. Severability

If any provision of this MoU shall be declared illegal, void or unenforceable, the same shall not affect the other provisions herein which shall be considered severable from such provision and shall remain in full force and effect.

Verified RedEstate

IN WITNESS HEREOF THE PARTIES HAVE SET THEIR HANDS ON THE DATE, MONTH AND THE YEAR HEREIN ABOVE WRITTEN IN THE PRESENCE OF

Witnesses:

1. Host ULB
2. Participating ULB(s) 1

3. Participating ULB(s) 2

[…]

4. Participating ULB(s) *[Insert number]*

**ANNEXURES**

**ANNEXURE A**

DISTRIBUTION OF O&M FEES

| S. No. | Name of the Urban Local Body | Host / Participating ULB | Annual O&M Fee (Rs.) | Monthly O&M Fee (Rs.) |
|---|---|---|---|---|
| 1. | | | | |
| 2. | | | | |
| 3. | | | | |
| 4. | | | | |
| 5. | | | | |

**ANNEXURE B**

Deed of Participation

This deed is made on this the _____ day of _____ at _____

BETWEEN

*[Insert name]* Municipal Corporation/Municipality/ Town Panchayats established under the [City Municipal Corporation Act or Tamil Nadu District Municipalities Act, 1920] of the State of Tamil Nadu, acting through *[Name of Commissioner],* the Commissioner (hereinafter referred to as "Host ULB", which expression shall, unless repugnant to the context or meaning thereof, mean and include its successors and assigns)

AND

*[Insert name]* Municipality/Town Panchayat established under the Tamil Nadu District Municipalities Act 1920 of the State of Tamil Nadu, acting through *[Name of Commissioner/Executive Officer]*, the Commissioner/Executive Officer (hereinafter referred to as "Participating ULB(s) _____", which expression shall, unless repugnant to the context or meaning thereof, mean and include its successors and assigns)

WHEREAS

(a) The Host ULB has already entered in to a MOU dated _____ with few Participating ULB(s) as defined thereof. The said MoU pertains to the Operative Guidelines for Septage Management for Local Bodies in Tamil Nadu, 2014 (the "Operative Guidelines") issued by the Government of Tamil Nadu (hereinafter referred to as "State Govt.") under G.O. (Ms) No. 106, MA&WS Department, Dated 01.09.2014 imposing an obligation on each local body to adopt suitable processes for the effective management of

Faecal Sludge and Septage generated within its jurisdiction. Pursuant to the Operative Guidelines, Local Bodies constituted under the Tamil Nadu District Municipalities Act, 1920 are responsible for, inter-alia, making adequate provisions for the collection/removal and disposal of Faecal Sludge and Septage.

(b) The State Govt. under G.O. (Ms) No. 88, Dated 31.08.2018 has developed a cluster-based approach to ensure optimum utilisation of existing Sewage Treatment Plants (the "STPs") and new Faecal Sludge Treatment Plants (The "FSTPs") in the State of Tamil Nadu. In furtherance of public interest and with the aim of improving standards of public health and sanitation in the State, the State Govt. has now decided to authorise and support this MoU to provide a facilitative framework for Co-treatment of Faecal Sludge and Septage at existing and upcoming STPs so that the Municipalities and Town Panchayats may use the facilities for the scientific treatment and disposal of the Faecal Sludge and Septage generated within their respective jurisdictions.

(c) In the above circumstances, the Participating ULB(s) herein has proposed their interest to join as a party to the said MoU for the purposes of using the facility as per the terms and conditions as defined thereof.

NOW THIS DEED WITNESSETH

1. The Host ULB hereby agrees and accepts the Participating ULB herein as a party to the said MoU dated _____. As per the relevant provisions of the said MoU, the Participating ULB herein shall be treated as a party to the said MoU by virtue of execution of this Deed.
2. The Participating ULB undertakes, agrees and accepts all the terms and conditions of the said MoU and the same shall be fully valid and binding upon the Participating ULB herein. Any further revision or modification whatever carried out in the said MoU from time to time shall be fully applicable and automatically to the Participating ULB herein.
3. The Host ULB shall notify such revisions and modifications of the terms to the Participating ULB and the same shall bind the Participating ULB as mentioned above.
4. For the purposes of the said MoU, the Participating ULB herein shall be referred as "Participating ULB_____".
5. This Deed takes effect forthwith and the same shall be valid till _____. After the expiry of the said term, the parties shall have the option for renewing this deed of participation by executing suitable deeds.
6. All the obligations, liabilities, responsibilities, payment terms as mentioned in the said MoU shall be applicable to the Participating ULB.
7. IN WITNESS HERE OF THE PARTIES HAVE SET THEIR HANDS ON THE DATE, MONTH AND THE YEAR HEREIN ABOVE WRITTEN IN THE PRESENCE OF

Witnesses:

1. Host ULB

2. Participating ULB

Verified RecEstate

## ANNEXURE 12 (B): MEMORANDUM OF UNDERTAKING FOR TREATMENT OF LOCAL SLUDGE AND SEPTAGE FSTP

Memorandum of Understanding (hereinafter referred to as the "MoU") made on *[Insert date],* day of *[Insert month]* 2019 at *[Insert place]*

BETWEEN

*[Insert name]* Municipality/Town Panchayat established under the Tamil Nadu District Municipalities Act, 1920 of the State of Tamil Nadu, acting through *[Name of Commissioner/Executive Officer],* the Commissioner (hereinafter referred to as "Host ULB", which expression shall, unless repugnant to the context or meaning thereof, mean and include its successors and assigns)

AND

*[Insert name]* Municipality/Town Panchayat established under the Tamil Nadu District Municipalities Act, 1920 of the State of Tamil Nadu, acting through *[Name of Commissioner/Executive Officer]*, the Commissioner/Executive Officer (hereinafter referred to as "Participating ULB 1", which expression shall, unless repugnant to the context or meaning thereof, mean and include its successors and assigns)

AND

*[Insert name]* Municipality/Town Panchayat established under the Tamil Nadu District Municipalities Act, 1920 of the State of Tamil Nadu, acting through *[Name of Commissioner/Executive Officer]*, the Commissioner/Executive Officer (hereinafter referred to as "Participating ULB 2", which expression shall, unless repugnant to the context or meaning thereof, mean and include its successors and assigns)

AND

*[…]*

*[Insert name]* Municipality/Town Panchayat established under the Tamil Nadu District Municipalities Act, 1920 of the State of Tamil Nadu, acting through *[Name of Commissioner/Executive Officer]*, the Commissioner/Executive Officer (hereinafter referred to as "Participating ULB *[Insert number]*", which expression shall, unless repugnant to the context or meaning thereof, mean and include its successors and assigns)

Participating ULB 1, Participating ULB 2 *[…]* and Participating ULB *[Insert number]* are hereinafter referred to as the "Participating ULB(s)" which have the same meaning given to it as provided in Clause 2of this MoU.

The Host ULB and the Participating ULB(s) are hereinafter referred to individually as the "Party" and collectively as the "Parties".

WHEREAS

The Operative Guidelines for Septage Management for Local Bodies in Tamil Nadu, 2014 (the "Operative Guidelines") issued by the Municipal Administration & Water Supply Department,

Government of Tamil Nadu (hereinafter referred to as "State Govt.") under G.O. (Ms) No. 106, Dated 01.09.2014; impose an obligation on each local body to adopt suitable processes for the effective management of Faecal Sludge and Septage generated within its jurisdiction. Pursuant to the Operative Guidelines, Local Bodies constituted under the Tamil Nadu District Municipalities Act, 1920 are responsible for, inter-alia, making adequate provisions for the collection/removal and disposal of Faecal Sludge and Septage.

The State Govt. under G.O. (Ms) No. 88, Dated 31.08.2018; has developed a cluster-based approach to ensure optimum utilization of existing Sewage Treatment Plants (the "STPs") and new Faecal Sludge Treatment Plants (The "FSTPs") in the State of Tamil Nadu. In furtherance of public interest and with the aim of improving standards of public health and sanitation in the State, the State Govt. has now decided to authorize and support this MoU to provide a facilitative framework for the operation and maintenance of the new FSTPs, created under the said G.O (Ms) No. 88, Dated 31.08.2018, so that the Municipalities and Town Panchayats within clusters may use the facilities for the scientific treatment and disposal of the Faecal Sludge and Septage generated within their respective jurisdictions.

NOW THIS MoU WITNESSETH

1. Purpose / Objectives of MoU

The purpose of this MoU is to enable the parties to maximize utilization and fund the operation and maintenance of the Faecal Sludge Treatment Plant. The parties currently intend to follow this MoU consistent with the Guidelines prescribed in G.O. (Ms) No. 106, Dated 01.09.2014 and covering the selection of towns as per G.O. (Ms) No. 88, Dated 31.08.2018 as well as other related provisions brought in force and effect as of the date hereof.

2. Definitions

In this MoU, unless repugnant to the context or inconsistent therewith, the following words, phrases and expressions shall bear the meaning hereinafter, respectively, assigned to them:

a. **Account** shall mean an Account which the Host ULB shall open and maintain with a Scheduled Bank in which all inflows and outflows of cash on account of capital and revenue receipts and expenditures shall be credited and debited, as the case may be, in accordance with the provisions of this MoU and includes the Sub-Accounts of such Account.

b. **Agreement** means the agreement between Host ULB and the Contractor for FSTP O&M including its schedules and annexures.

c. **Alternate Arrangement** – shall mean a facility for treating Faecal Sludge and Septage, such as Underground Sewerage System and Sewage Treatment Plant or a standalone FSTP, which meet regulatory standards.

d. **Authority** shall mean and include the Municipality/Municipal Corporation/Town Panchayat/Regional Directorate of Municipal Administration/Assistant Directorate of Town Panchayats/Commissionerate of Municipal Administration/Directorate of Town Panchayats or such other department as may be notified/appointed from time to time for the purpose of implementation of this MoU.

e. **Bio-medical Waste** shall have the meaning as defined under the Biomedical Wastes (Management and Handling) Rules, 1998 and as amended thereto.

f. **Consent to Operate** means the certificate issued by the Tamil Nadu Pollution Control Board prior to commencement of FSTP operations.

g. **Contractor** shall mean the person or persons, as the case may be, with whom the Host ULB has entered into the operation and maintenance (O&M) contract, or any other agreement or a material contract for construction, operation and/or maintenance of the FSTP or matters incidental thereto.

h. **Construction and Demolition Waste** means solid waste resulting from construction, remodeling, repair, renovation or demolition of structures or from land clearing activities or trenching or de-silting activities.

i. **Changes in Law** means the occurrence of any of the following after the Operation Start Date:

- the enactment of any new Indian law or Tamil Nadu State law;
- the repeal, modification or re-enactment of any existing Indian law or Tamil Nadu State law;
- the commencement of any Indian law or Tamil Nadu State law which has not entered into effect until the date of the MoU; and
- a change in the interpretation or application of any Indian law or Tamil Nadu State law by a judgement of a court of record which has become final, conclusive and binding, as compared to such interpretation or application by a court of record prior to the date of the MoU.

j. **Dead Remains** means the dead bodies, carcasses, bones or skeletal remains of animals, rodents and other living beings (other than plants).

k. **Decantation Fee** shall mean the amount payable by Desludging Operators to the Host ULB upon each visit to the FSTP Site for the disposal of Faecal Sludge and Septage.

l. **Desludging Operator** shall mean any person or firm or self-help group or society or private company granted the licence to collect, transport and dispose Faecal Sludge and Septage.

m. **Desludging Vehicle** means the vacuum trucks or such other vehicles equipped with motorized pumps and storage tank owned by the ULB or Desludging Operator, of such design specification as may be approved from time to time by the ULB, for emptying and transporting Faecal Sludge and Septage.

n. **Effective Date** shall mean the date on which this MoU comes into force and effect pursuant to commissioning of the FSTP.

Verified RedEstate

o. **E-waste** means discarded electrical or electronic devices.

p. **Excluded Waste** means waste material of the nature that the FSTP is not designed or authorized to receive, manage, process and dispose which includes (i) Hazardous Waste (ii) Bio-medical Waste (iii) Dead Remains (iv) E-Waste and (v) Construction and Demolition Waste.

q. **Faecal Sludge** means mean raw or partially digested, in a slurry or semi solid form, the collection, storage or treatment of combinations of excreta and black water, with or without grey water. It is the solid or settled contents of pit latrines and septic tanks.

r. **Faecal Sludge Treatment Plant (FSTP)** means a treatment plant of the design specifications and guidelines issued by the concerned Authority from time to time.

s. **FSTP Site** shall mean the site of the FSTP including the land, buildings, structures, road works, trees and any other immovable property on, or attached to, the Site.

t. **Force Majeure Event**–means any event which prevents or delays the performance of the obligations under this MoU in whole or in part by either Party by reason of public agitation, civil disturbance, riots, war, hostilities, acts of public enemies, civil commotion, sabotage, fire, flood, earthquake, epidemics, explosion, strikes, lock-outs, acts of God, acts on orders of Government/authorities, rules and regulations or delay/abandonment due to order of the Court and/or any other cause beyond the reasonable control of the Party affected.

u. **Good Industry Practice** means the practices, methods, techniques, designs, standards, skills, diligence, efficiency, reliability and prudence which are generally and reasonably expected from a contractor and/or Party in the performance of its obligations.

v. **Hazardous Waste** shall have the meaning as defined under the Hazardous Wastes (Management and Handling) Rules, 1989.

w. **Host ULB** shall mean the ULB that owns and is responsible for the operation and maintenance of the FSTP.

x. **Licence Fee** shall mean the amount payable by Desludging Operators annually to obtain a licence to operate within a ULB Cluster.

y. **Operative Guidelines** as defined in the Recitals.

z. **Operations Start Date** shall mean the date notified by the Host ULB as the date on which the FSTP is ready to commence commercial operations after the Testing Period and receipt of Consent to Operate.

aa. **Operations and Maintenance (O&M)** means the operation and maintenance of the FSTP and includes all matters connected with or incidental to such

Verified RealEstate

operation and maintenance and provision of services and facilities in accordance with the provisions of this MoU.

bb. **Operations and Maintenance Manual (O&M Manual)** shall mean standard operating procedures for regular, preventive, long term operations and maintenance covering safety requirements, material and equipment replacement and emergency activities at the FSTP.

cc. **Participating ULB(s)** shall mean Municipal Corporation/Municipality/Town Panchayat are defined in the Recitals which are party to this MoU, and include any other Municipal Corporation/Municipality/Town Panchayat which may at a later date become party to this MoU.

dd. **Scheduled Bank** means those banks which have been included in the Second Schedule of Reserve Bank of India Act, 1934. RBI in turn includes only those banks in this Schedule which satisfy the criteria laid down vide section 42(6)(a) of the said Act.

ee. **Septage** means the liquid and solid material that is pumped from a septic tank, cesspool, or such on site treatment facility after it has accumulated over a period of time.

ff. **Testing and Screening Protocol** shall mean testing the Faecal Sludge and Septage for pH and electrical conductivity and screening for waste such as industrial waste that may adversely affect the FSTP operations.

gg. **Testing Period** shall mean a period within which any performance tests and trial runs shall be conducted at the FSTP so as to ensure that the FSTP is fit and ready to operate commercially.

hh. **Treated Products** shall mean effluent and stabilized bio solids generated by the treatment of Faecal Sludge and Septage that meet the regulatory standards.

ii. **Test Results** shall mean measurements from the testing carried out for assessing the FSTP performance and the quality of the Treated Products.

jj. **Urban Local Body (ULB)** means the Municipal Corporation/Municipality/Town Panchayat located within the State of Tamil Nadu.

kk. **ULB Cluster** shall mean the Municipal Corporations, Municipalities and Town Panchayats which together use a Faecal Sludge Treatment Plant defined as per G.O. (Ms) No. 106, Dated 01.09.2014 and G.O. (Ms) No. 88, Dated 31.08.2018 and as notified from time to time.

3. Interpretations

a. The words, phrases and expressions defined hereinabove in Clause 2 or defined elsewhere by description in this MoU, together with their respective grammatical variations and cognate expressions shall carry the respective meanings assigned to them in the said Clause 2 or in this MoU and shall be interpreted accordingly;

Verified © RealEstate™

b. all words in singular shall be deemed to connote their respective plurals and vice-versa, unless the context suggests otherwise;

c. the words “include” and “including” are to be construed without limitation;

d. the headings of the Clauses in this MoU are merely for purposes of convenience and shall have no bearing on the interpretation of this MoU;

e. The Annexures to this MoU form an integral part of this MoU and shall be interpreted accordingly.

4. Measurements

a. All measurements and calculations shall be in the metric system and calculations done to 2 (two) decimal places, with the third digit of 5 (five) or above being rounded up and below 5 (five) being rounded down.

5. Obligations of Host ULB Prior to Operations Start Date

a. The Host ULB shall grant a suitable Contractor the rights and obligations required to enable it to duly undertake the O&M of the FSTP.

b. The Host ULB shall open and establish an Account with a Scheduled Bank in accordance with the terms and conditions of this MoU (hereinafter referred to as the “Account”). The Account shall be for the purposes of the O&M of the FSTP. The Account shall be operated by the Host ULB.

c. The Host ULB shall not be responsible in any manner for the treatment of Faecal Sludge and Septage generated within the jurisdiction of the Participating ULB(s) before the Operations Start Date.

d. The Host ULB shall notify the Participating ULB(s) of the Operations Start Date subject to receipt of the Consent to Operate by advance notice in writing.

e. The Host ULB shall inform the Participating ULB(s) of the duration of the Testing Period.

f. At any time during the Testing Period if any material defects, imperfections, shortcomings or such other faults are identified, the Host ULB shall notify Participating ULB(s) of the same and any consequent change to the Operations Start Date.

g. In the event that there is a delay in the occurrence of the Operations Start Date due to (i) any act or omission on the part of the Contractor and (iii) Force Majeure Event, Host ULB may (i) Terminate this MoU in accordance with Clause 15; or (ii) extend the Operations Start Date for a period as it deems fit.

h. The Host ULB shall inform Desludging Operators operating within the ULB Cluster of the operational hours of the FSTP, the disposal process, Decantation Fee and excluded delivery routes during specified hours.

Verified RedEstate™

i. The Host ULB shall inform the Participating ULB(s) prior to implementation of any proposed modification or change to the operational hours of the FSTP and the disposal process.

j. The Host ULB shall, in consultation with the Participating ULB(s), involve Non-Governmental Organizations (NGOs), Government Organizations, representatives of ULBs, District Collector and other relevant organizations or officers, conduct trainings and create awareness regarding the FSTP.

6. Obligations of Participating ULB(s) Prior to Operations Start Date

a. The Participating ULB(s) agrees and acknowledges that prior to the Operations Start Date, the Participating ULB(s) shall be responsible for the treatment of Faecal Sludge and Septage generated in its jurisdiction as per the Operative Guidelines.

b. At any time during the Testing Period and before the Operations Start Date, the Participating ULB(s) shall make available to the Host ULB at the FSTP, without any cost obligations, necessary quantities of Faecal Sludge and Septage for (i) testing purposes and (ii) performance trials at the FSTP, as requisitioned by the Host ULB.

c. Participating ULB(s) shall inform Desludging Operators operating within its jurisdiction of the operational hours of the FSTP, the disposal process, Decantation Fee and excluded delivery routes during specified hours.

d. The Participating ULB(s) shall support the Host ULB in conducting training and creating awareness regarding the FSTP.

7. Obligations of Host ULB from Operations Start Date

a. The Host ULB shall be responsible for the O&M of the FSTP.

b. The Host ULB shall convene a meeting with all Participating ULB(s) every 90 days on matters specified under this MoU and shall share with all Participating ULB(s) the minutes of the meeting.

c. The Host ULB shall maintain an O&M Manual covering the O&M requirements, safety requirements and Good Industry Practice, and shall be made available to the Participating ULB(s).

d. The Host ULB shall record details of Faecal Sludge and Septage received or rejected (hereinafter referred to as the “Record”).

e. The Host ULB shall share with Participating ULB(s) the Record on a monthly basis from the Operations Start Date.

f. The Host ULB reserves the right to disallow Desludging Vehicles from disposing Faecal Sludge and Septage at the FSTP should the Faecal Sludge and Septage be deemed as Excluded Waste by the Testing and Screening Protocol.

Verified RealEstate ™

g. The Host ULB reserves the right to refuse entry to Desludging Operators without a valid desludging licence and/or on non-payment of Decantation Fee.

h. The Host ULB shall ensure Test Results for Treated Products and FSTP performance are recorded and maintained at the FSTP Site. A summary of the Test Results shall be publicly displayed at the FSTP Site.

i. The Host ULB shall share with the Participating ULB(s)' the record of Test Results on request.

j. The Host ULB shall ensure that revenue receipts, such as Licence Fee, Decantation Fee and from the sale of Treated Products, is credited to the Account.

k. The Host ULB shall, in consultation with the Participating ULB(s), involve NGOs, Government Organizations, representatives of ULBs, District Collector and other relevant organizations or officers, conduct trainings and create awareness regarding the FSTP.

8. Obligations of Participating ULB(s) from Operations Start Date

a. Participating ULB(s) shall ensure Desludging Operator(s) operating within their respective jurisdiction shall have a valid de-sludging licence.

b. The Participating ULB(s) will support the Host ULB in conducting training and creating awareness regarding the FSTP.

9. Dispute Resolution

a. Under this MoU a Joint Committee (the "JC") comprising of the Regional Director of Municipal Administration, the Assistant Director of Town Panchayats and the Regional Executive Engineer shall be constituted.

b. Under this MoU an Appeals Committee (the "AC") comprising of the Joint Commissioner of Municipal Administration, the Joint Director (Schemes) of the Directorate of Town Panchayats, the Superintendent Engineer of the Commissionerate of Municipal Administration and Superintendent Engineer of the Directorate of Town Panchayats shall be constituted.

c. In the event of any dispute arising between the Parties in relation to or under this MoU, the same shall be settled by the JC in the first instance and on appeal referred to the AC. The decision of the AC shall be final and binding.

10. Payment Terms

a. In accordance with the terms, conditions and covenants set forth in this MoU, the Host ULB shall raise a demand notice for the O&M Fee in accordance with the provisions of Annexure A; Distribution of O&M Fees; payable by each participating ULB within 30 days of receipt of the demand notice from the Host ULB, however, the O&M Fee shall be payable to the Host ULB only on the date of commencement of the Operations.

Verified RedEsports ™

b. If participating ULB(s) fail(s) to pay the O&M Fee payable in accordance with Clause 10.a., in part or full to the Host ULB, the Authority concerned on recommendation of the AC undertakes to deduct the amount owed to the Host ULB from grant funds or funds designated for distribution pursuant to the State Financial Commission earmarked for the concerned Participating ULB(s)or by any other measure it may deem fit and pay such amount directly to the Host ULB, as the case may be.

11. Review and Amendment

a. Any Municipal Corporation/Municipality/Town Panchayat other than the Host ULB and Participating ULB(s) that is desirous to use the FSTP and the services provided by it, shall sign a Deed of Participation as provided in Annexure B, after obtaining written approval from the Commissionerate of Municipal Administration and Directorate of Town Panchayats to use the FSTP.

b. The Host ULB shall expand the capacity of the FSTP in consultation with the Commissionerate of Municipal Administration or Directorate of Town Panchayats, when received volume of FS exceeds existing capacity.

c. The Payment Terms as defined under Clause 10 shall be reviewed by the AC and may be amended after six (6) months and twelve (12) months from the Operations Start Date, if needed.

d. In the event of the Commissionerate of Municipal Administration and Directorate of Town Panchayats approving the participation of any Municipal Corporation/Municipality/Town Panchayat other than the Host ULB and Participating ULB(s) in accordance with Clause 12.a, the AC shall review and amend the Payment Terms as defined under Clause 10, payable from such date as decided by the AC at the point of such event.

e. In the event of the exit of the Host ULB and/or one or more of the Participating ULB(s) from the MoU, the AC shall review and amend the Payment Terms as defined under Clause 10, payable from such date as decided by the AC at the point of such event.

12. Term and Renewal

a. The rights and obligations of the Parties granted under this MoU shall be valid for a Term of three years.

b. The Host ULB and Participating ULB(s) may agree to renew the terms and conditions of this MoU, after the expiry of the Term for such other period as it deems fit and on such terms and condition as may be decided at the point of such renewal.

13. Suspension/Temporary Shutdown/Downtime or Closure of the FSTP

a. The Host ULB shall ensure 50% (fifty per cent) of the total capacity of the FSTP shall be operational at all times except in the case of a Force Majeure event.

Verified RedEstate ™

b. The Host ULB may be allowed to suspend, temporarily shut down or close the FSTP in case of planned or unplanned repair and maintenance.

c. The Host ULB shall inform Participating ULB(s) of planned repair and maintenance activity in advance of such activity.

d. The Host ULB shall inform Participating ULB(s) of unplanned repair and maintenance activity as soon as practicable and in any case within a reasonable period of time from the commencement of the activity.

e. The Host ULB and Participating ULB(s) shall inform Desludging Operators within their respective jurisdictions of planned maintenance activity at the FSTP within in a reasonable period of time in advance of such activity.

f. During the period of planned or unplanned repair or maintenance activity, the Host ULB and Participating ULB(s) may inform Desludging Operators to avoid desludging during the said period in the first instance and subsequently, of the next nearest treatment facility for disposal of Faecal Sludge and Septage.

14. Force Majeure Event

a. As soon as practicable and in any case within a reasonable period of time from the date of occurrence of a Force Majeure Event or the date of knowledge thereof, the Host ULB shall inform the Participating ULB(s) of the same setting out, inter-alia, the following in reasonable detail: -

   i. the nature, extent and estimated duration of the Force Majeure Event;

   ii. the nature of and the extent to which, performance or any of its obligations under this MoU is affected by the Force Majeure Event;

   iii. the measures, including securing monetary assistance from the State Govt., which the Host ULB has taken or proposes to take to mitigate the impact of the Force Majeure Event and to resume performances of such of its obligations affected thereby.

b. As soon as practicable and in any case within a reasonable period of time from the receipt of the notification by the Host ULB in accordance with the preceding sub-clause (a), the Parties meet, hold discussions in good faith to: -

   i. assess the impact of the underlying Force Majeure Event;

   ii. formulate measures to mutually share damage costs in consultation with the AC;

   iii. formulate damage mitigation measures and steps to be undertaken by the Parties for resumption of obligations.

c. If a Force Majeure Event continues or is in the reasonable judgment of the Parties likely to continue beyond the original estimated duration, the Parties may mutually decide to terminate this MoU or continue this MoU on mutually agreed revised terms. If the Parties are unable to reach an agreement in this

regard, the Host ULB shall after the expiry of the said period, be entitled to terminate this MoU in accordance with Clause 15.

15. Termination

a. The Parties hereby agree that the Host and/or Participating ULB(s) cannot terminate its participation in this MoU until it shall submit a written request to that effect to the AC clearly stating: (a) the reasons for seeking an exit from this MoU; (b) the Alternate Arrangement established by it to scientifically dispose the Faecal Sludge and Septage generated within its jurisdiction; and (c) the costs and benefits to the ULB in ceasing its participation in this MoU and the implementation of the Alternate Arrangement.

b. The AC will grant approval for the exit of the Host and/or Participating ULB(s) only if: -

   i. the Alternate Arrangement is viable and will enable the Host and/or Participating ULB(s) to dispose Faecal Sludge and Septage in accordance with the Applicable Laws;

   ii. the Alternate Arrangement is more cost effective for the Host and/or Participating ULB(s); and

   iii. the continued viability of the FSTP is not adversely affected.

16. Notices

a. Unless otherwise stated, notices to be given under this MoU include but are not limited to a notice of waiver of term, breach of any term of this MoU and termination of this MoU, shall be in writing and shall be given by hand delivery, recognized courier, mailed, delivered or transmitted to the Parties at their respective addresses set forth below:

[*Insert addresses of all Parties*]

b. All notices under this MoU shall be in English and/or Tamil.

17. Counterparts

This MoU may be executed in two counterparts, each of which when executed and delivered shall constitute an original of this MoU but shall together constitute one and only one MoU.

18. Severability

If any provision of this MoU shall be declared illegal, void or unenforceable, the same shall not affect the other provisions herein which shall be considered severable from such provision and shall remain in full force and effect.

Verified by RealEstate

IN WITNESS HEREOF THE PARTIES HAVE SET THEIR HANDS ON THE DATE, MONTH AND THE YEAR HEREIN ABOVE WRITTEN IN THE PRESENCE OF

Witnesses:

1. Host ULB

2. Participating ULB(s) 1

3. Participating ULB(s) 2

[…]

4. Participating ULB(s) *[Insert number]*

**ANNEXURE A**

DISTRIBUTION OF O&M FEES

| S. No. | Name of the Urban Local Body | Host/ Participating ULB | Annual O&M Fee (Rs.) | Monthly O&M Fee (Rs.) |
|---|---|---|---|---|
| 1. | | | | |
| 2. | | | | |
| 3. | | | | |
| 4. | | | | |
| 5. | | | | |

Verified RedEstate ™

**ANNEXURE B**

Deed of Participation

This deed is made on this the _____ day of _____ at _____

BETWEEN

*[Insert name]* Municipality/Town Panchayat established under the Tamil Nadu District Municipalities Act, 1920 of the State of Tamil Nadu, acting through *[Name of Commissioner/Executive Officer],* the Commissioner/Executive Officer (hereinafter referred to as "Host ULB", which expression shall, unless repugnant to the context or meaning thereof, mean and include its successors and assigns)

AND

*[Insert name]* Municipality/Town Panchayat established under the Tamil Nadu District Municipalities Act, 1920 of the State of Tamil Nadu, acting through *[Name of Commissioner/Executive Officer]*, the Commissioner/Executive Officer (hereinafter referred to as "Participating ULB(s) _____", which expression shall, unless repugnant to the context or meaning thereof, mean and include its successors and assigns)

WHEREAS

(a) The Host ULB has already entered in to a MOU dated _____ with few Participating ULB(s) as defined thereof. The said MoU pertains to the Operative Guidelines for Septage Management for Local Bodies in Tamil Nadu, 2014 (the "Operative Guidelines") issued by the Municipal Administration & Water Supply Department, Government of Tamil Nadu (hereinafter referred to as "State Govt.") under G.O. (Ms) No. 106, Dated 01.09.2014 imposing an obligation on each local body to adopt suitable processes for the effective management of Faecal Sludge and Septage generated within its jurisdiction. Pursuant to the Operative Guidelines, Local Bodies constituted under the Tamil Nadu District Municipalities Act, 1920 are responsible for, inter-alia, making adequate provisions for the collection/removal and disposal of Faecal Sludge and Septage.

(b) The State Govt. under G.O. (Ms) No. 88, Dated 31.08.2018; has developed a cluster-based approach to ensure optimum utilization of existing Sewage Treatment Plants (the "STPs") and new Faecal Sludge Treatment Plants (The "FSTPs") in the State of Tamil Nadu .In furtherance of public interest and with the aim of improving standards of public health and sanitation in the State, the State Govt. has now decided to authorize and support this MoU to provide a facilitative framework for the operation and maintenance of the new FSTPs, created under said G.O (Ms) No. 88, dated 31.08.2018 so that the Municipalities and Town Panchayats within clusters may use the facilities for the scientific treatment and disposal of the Faecal Sludge and Septage generated within their respective jurisdictions.

(c) In the above circumstances, the Participating ULB(s) herein has proposed their interest to join as a party to the said MoU for the purposes of using the facility as per the terms and conditions as defined thereof.

Verified by RedEstate ™

NOW THIS DEED WITNESSETH

1. The Host ULB hereby agrees and accepts the Participating ULB herein as a party to the said MoU dated _____. As per the relevant provisions of the said MoU, the Participating ULB herein shall be treated as a party to the said MoU by virtue of execution of this Deed.
2. The Participating ULB undertakes, agrees and accepts all the terms and conditions of the said MoU and the same shall be fully valid and binding upon the Participating ULB herein. Any further revision or modification whatever carried out in the said MoU from time to time shall be fully applicable and automatically to the Participating ULB herein.
3. The Host ULB shall notify such revisions and modifications of the terms to the Participating ULB and the same shall bind the Participating ULB as mentioned above.
4. For the purposes of the said MoU, the Participating ULB herein shall be referred as "Participating ULB_____".
5. This Deed takes effect forthwith and the same shall be valid till _____. After the expiry of the said term, the parties shall have the option for renewing this deed of participation by executing suitable deeds.
6. All the obligations, liabilities, responsibilities, payment terms as mentioned in the said MoU shall be applicable to the Participating ULB.

IN WITNESS HERE OF THE PARTIES HAVE SET THEIR HANDS ON THE DATE, MONTH AND THE YEAR HEREIN ABOVE WRITTEN IN THE PRESENCE OF

Witnesses:

1. Host ULB

2. Participating ULB

Verified RealEstate ™

## ANNEXURE 13: SAMPLE HOUSEHOLD SURVEY FOR IDENTIFYING ON-SITE SANITATION SYSTEM AND UNDERSTANDING DEMAND FOR DE-SLUDGING SERVICES

This is a sample form for Residential, Commercial, Institutional as well as Community and Public toilet survey that can be used for survey. This form may be considered by ULBs and may be expanded to add new questions.

### Sample Format

| | | |
|---|---|---|
| Name of Local Body where Property is located | | |
| GPS Location of Property | | |
| Type of Property | 1. Residential<br>2. Commercial<br>3. Institutional<br>4. Community / Public Toilet | |
| Category of Property (corresponding to Type) | Residential | 1. Individual House<br>2. Apartment / Flats<br>3. Government Quarters (incl. TNHB / TNSCB)<br>4. Student / Working Hostel |
| | Commercial | 1. Shopping center / mall<br>2. Restaurant<br>3. Hotel / Lodge<br>4. Theatre / Cinema Hall<br>5. Event / Community Hall |
| | Institutional | 1. Educational Institution<br>2. Hospital, Clinic & Health care centers<br>3. Office complexes (incl government office) |
| | CT/PT | 1. Community Toilet<br>2 Public Toilet |
| | Other | Factories / Industries / Mills |
| Slum / Non-Slum | | |
| Name of Property | | |
| Street / Area Name of Property | | |
| Ward Number | | |
| Number of toilet users per day (to be filled as applicable based on property and category type) | Individual House/ Apartment / Flat/ Quarters / Hostel | - No. of houses<br>- No. of residents |
| | Commercial / shopping complex / mall | - No. of visitors per day |
| | Restaurant / hotels / lodges | - Seating capacity<br>- No. of rooms |

Verified RealEstate™

| | | |
|---|---|---|
| | Office complex | - No. of staff<br>- No. of visitors |
| | Educational institutions | - No. of students |
| | Hospital / Clinics / Healthcare centers | - No. of beds<br>- No. of visitors per day |
| | Industry / factory / manufacturing unit | - No. of staff |
| | Event halls / theatre | - Seating capacity |
| | Community / Public Toilet | - No. of Users per day |
| Total Number of toilets / seats | | |
| Type of containment unit | 1. Septic Tank<br>2. Pit<br>3. Other (please specify) | |
| Capacity of containment unit | | |
| Location of containment Unit | | |
| Greywater connection | 1. Connected to Containment Unit<br>2. Open Disposal<br>3. Storm water drains<br>4. Other (please specify) | |
| Effluent Disposal arrangement | 1. Soak pit<br>2. Dispersion Trench<br>3. No outlet<br>4. Disposal to Open, Drain, Waterbody<br>5. Other (please specify) | |
| Can Containment Unit be easily accessed for de-sludging | | |
| De-sludging Frequency | Every _____ (number) _____ (Days / Weeks / Months / Years) | |
| Last de-sludging date | | |
| Number of loads desludged previously | | |
| Name & Role of Respondent | | |
| Contact of Respondent | | |

Verified RedEstate ™

## ANNEXURE 14 - CLOUD BASED MOBILE – WEB TRACKING:

The user / septage producer will have the freedom to book their slot for emptying their septage tanks from any location. The user will have a varied option of booking the desludging trucks. One can effortlessly book using the following options:

- Phone call to assigned call centers
- Web based Application
- Mobile based Application
- Whatsapp Messaging
- SMS

The very 1st thing the user has to carryout is the registration process.

**Registration Process:** Every user who is willing to use the facility of the local body Desludging Trucks must create an account and register with the local body Desludging Online Portal using their Name, Mobile Number or E-mail & Address where they have their septage tanks installed.

Similarly, the Trucks owners who are willing to involve in this program must register with the local body Desludging Online Portal selecting Truck Owners option.

**Booking a Desludging Truck:** A user will be able to book a truck from the local body only after the One Time Registration. Every registered user and the driver information will be safely saved in the cloud database. This will be helpful to easily track the number of loads per user for a selected period.

User can book their own truck using any one of the above mentioned five methods. The booking request will be sent to the nearby truck driver whose vehicle is registered with the local body portal. On acceptance of the request, the truck details like driver name, truck model and a contact number will be sent to the user mobile through SMS / Whatsapp / Mobile Application / Email.

**One Time Password:** After the booking confirmation, a One Time Password (OTP) will be sent to the user mobile with the booking confirmation. This OTP must be shared with the Truck driver on their arrival to the destination. This OTP confirmation will be helpful to record the location details of the septage tanks.

**Real Time Tracking:** The user with the help of the Mobile – Web Application can easily be able to locate their trucks in real time. This will make them to sight the exact discharge point of their septage and controlling any illegal discharge activities.

Verified RealEstate ™

## Cloud Based Mobile – Web Tracking – Closed Loop System

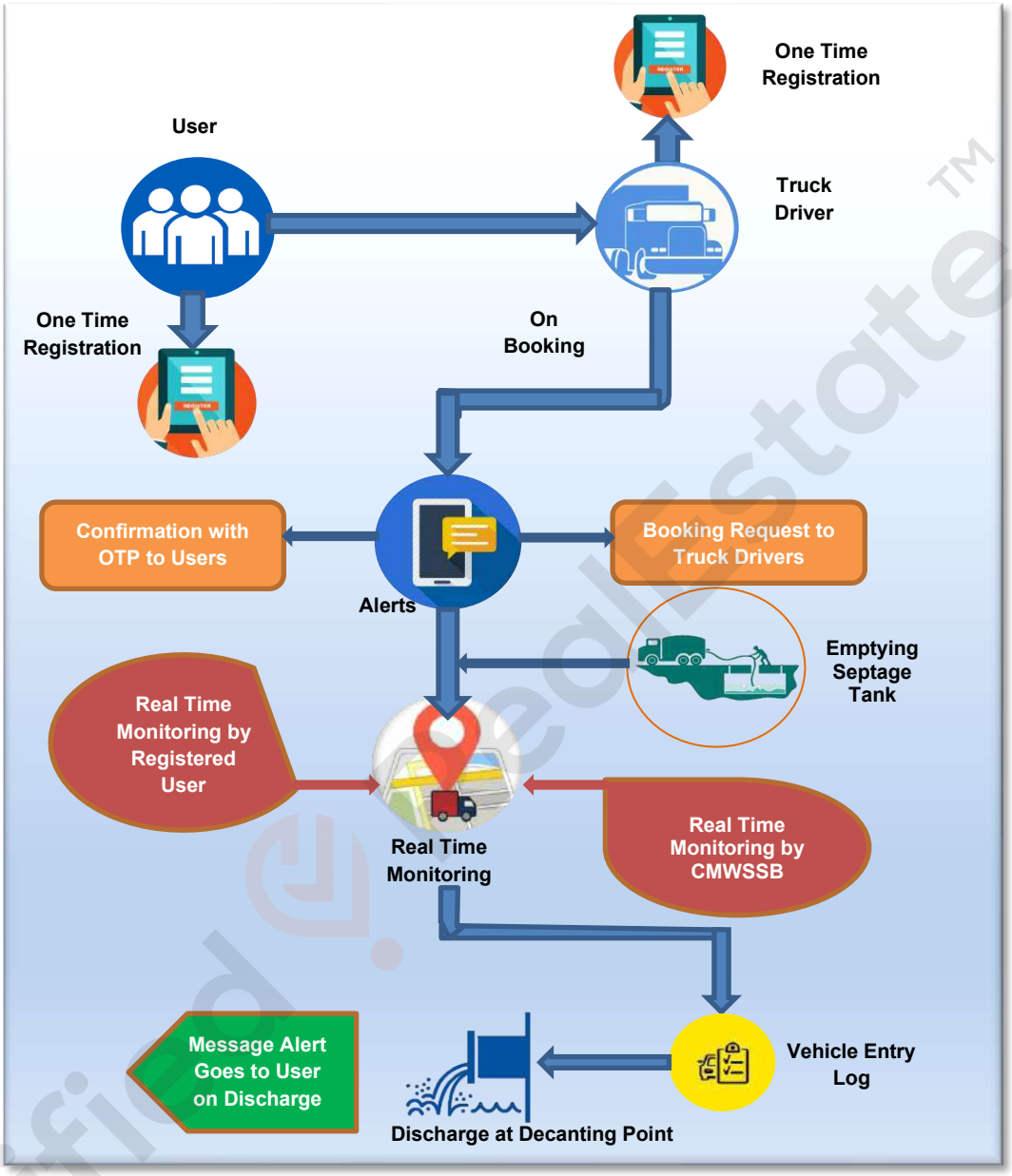


**Closed Loop System:** The truck which is carrying the septage will be monitored in real time by the local body servers. Once they de-sludge the septage from user's tank, their discharge in to the decanting points will be monitored. The truck/service registration number will be logged in the entry of decanting point. This logging of the registration number ensures the completion of the trip authorizing a closed loop system.

This will be a major advantage for the prevention of illegal discharges in to water bodies and will also enable a foolproof service at reasonable market rates.

## ANNEXURE 15: RECORD KEEPING FORMAT AT STP / FSTP FOR INCOMING VEHICLE

| S No | Date | Time | Operator information | | Source information | | | | Faecal Sludge / Septage Screening parameters | | Tipping/Decanting/Discharge fee | |
|---|---|---|---|---|---|---|---|---|---|---|---|---|
| | | | Operator Name | Vehicle number | Local Body Name | Local Body Type | Address/ Area name / Ward number | Source Type | pH | Electrical Conductivity - EC (mS) | Fee Amount (Rs.) | Receipt number |
| | | | | | | Corporation, Municipality, Town Panchayat, Village Panchayat | | 1. Individual House<br>2. Apartment, Quarters, Group Housing<br>3. Students / Working hostels, Mansions<br>4. Community / Public Toilet<br>5. Malls, Shopping Complex<br>6. Marriage / Community hall, Recreation Club, Cinema Theatre<br>7. Hotels, Lodges, Restaurants<br>8. Office buildings<br>9. Colleges, Schools, Educational Institutions<br>10. Hospital, Clinic, Health care centres<br>11. Others (Please mention) | | | | |

**SHIV DAS MEENA**
**ADDITIONAL CHIEF SECRETARY TO GOVERNMENT**

/True copy/

21.1.23

**Section Officer**

21/1/23

Verified RgiEstate